AC centrifugal fans backward curved

AC centrifugal fans with plastic impeller	Ø 133 - Ø 355	14
AC centrifugal fans with sheet steel impeller	Ø 250 - Ø 280	36
AC centrifugal fans with aluminium impeller	Ø 310 - Ø 630	44

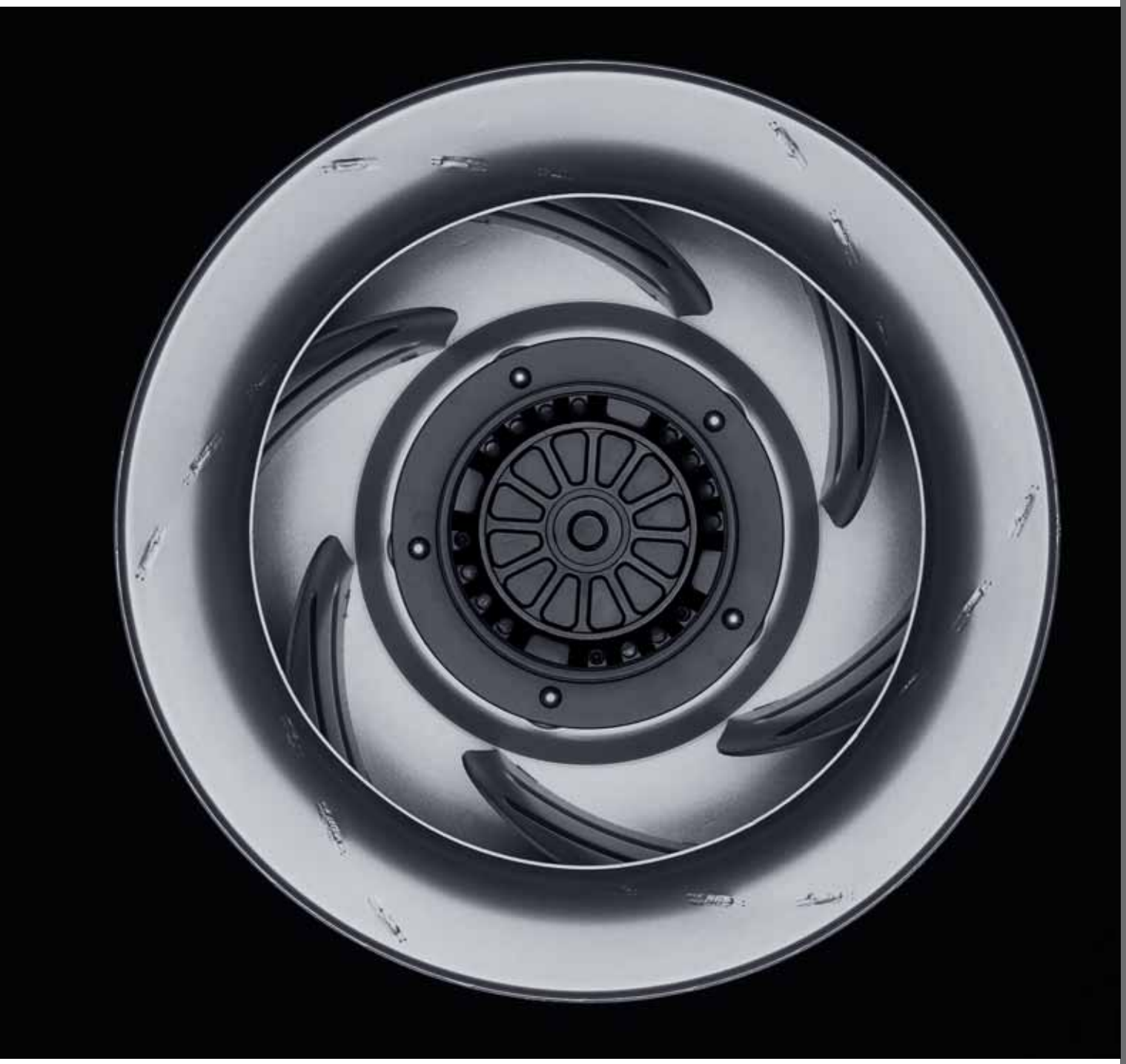

AC centrifugal fans

backward curved, Ø 133

- **Material:** Impeller: PA plastic 6.6, fibreglass-reinforced
  Rotor: Partially cast in aluminium
- **Number of blades:** 7
- **Direction of rotation:** Clockwise, seen on rotor
- **Type of protection:** IP 44
- **Insulation class:** "B"
- **Mounting position:** Any
- **Condensate discharges:** None
- **Mode of operation:** Continuous operation (S1)
- **Bearings:** Maintenance-free ball bearings

Nominal data

Type	Motor	Curve	Nominal voltage VAC	Frequency Hz	Air flow m³/h	Speed/rpm rpm	Power input W	Current draw A	Capacitor µF/VDB	Sound pressure level dB(A)	Perm. amb. temp. °C	Electr. connection p. 596 f.
R2E 133	M2E 052-BF	A	1~ 230 1~ 230	50 60	240 280	2700 3200	25 28	0.11 0.13	1.0 / 400 1.0 / 400	53 56	-25 to +55 -25 to +65	A1)
R2E 133	M2E 052-BF	B	1~ 230 1~ 230	50 60	290 345	2800 3300	24 27	0.11 0.13	1.0 / 400 1.0 / 400	56 60	-25 to +45 -25 to +60	A1)

subject to alterations

Curves

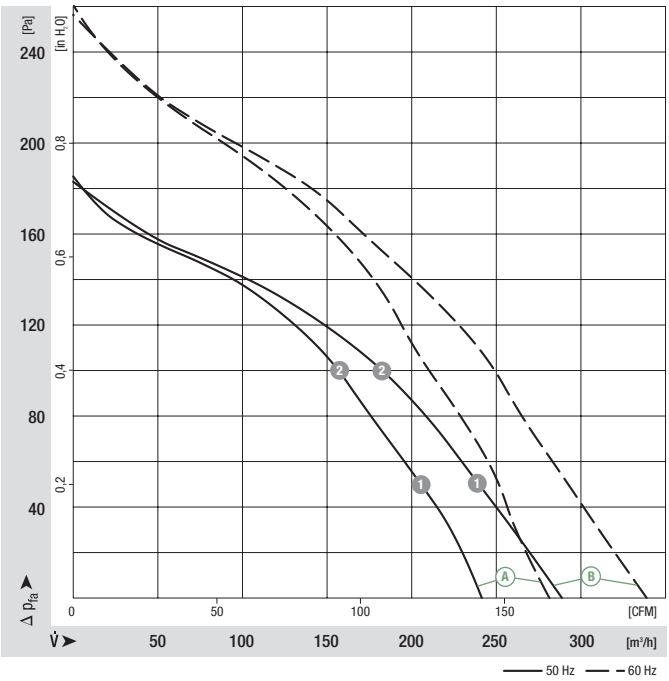

	n [rpm]	P_1 [W]	I [A]
A 1	2680	25	0.11
A 2	2680	25	0.11
B 1	2710	25	0.11
B 2	2700	26	0.12

ebmpapst

- **Motor protection:** TOP wired internally
- **Cable exit:** Variable
- **Protection class:** I
- **Product conforming to standards:** EN 60335-1, CE
- **Approvals:** CCC, GOST

	Mass of centrifugal fan	Dimensions	
Centrifugal fan	**kg**	**c**	**Inlet nozzle (long)**
R2E 133-BH66 -07	0.7	73.0	09566-2-4013
R2E 133-BH66 -05	0.7	91.0	09566-2-4013

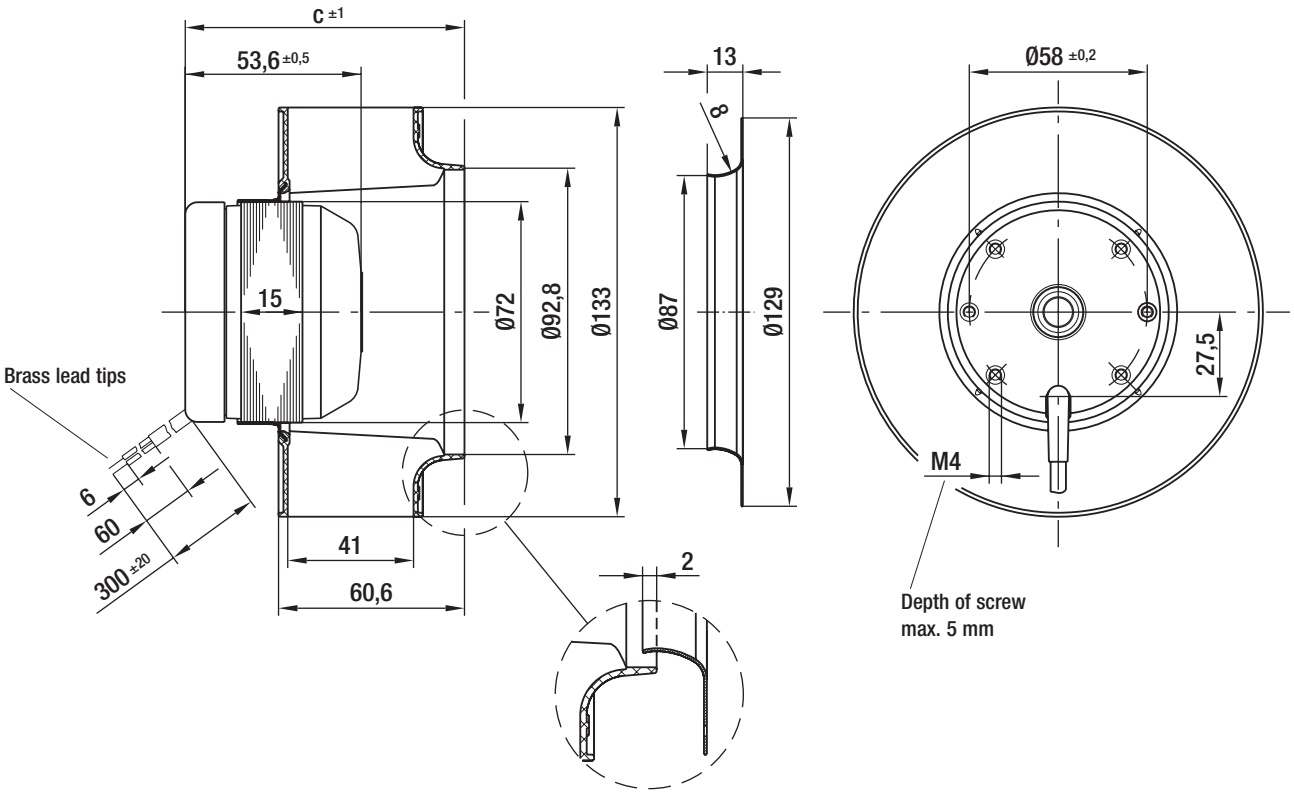

AC centrifugal fans

backward curved, Ø 133

- **Material:** Impeller: PA plastic 6.6, fibreglass-reinforced
  Rotor: Coated in black
- **Number of blades:** 7
- **Direction of rotation:** Clockwise, seen on rotor
- **Type of protection:** IP 22
- **Insulation class:** "B"
- **Mounting position:** Shaft horizontal or rotor on bottom; rotor on top on request
- **Condensate discharges:** Rotor-side
- **Mode of operation:** Continuous operation (S1)
- **Bearings:** Maintenance-free ball bearings

Nominal data

Type	Motor	Curve	Nominal voltage VAC	Frequency Hz	Air flow m³/h	Speed/rpm rpm	Power input W	Current draw A	Capacitor µF/VDB	Sound pressure level dB(A)	Perm. amb. temp. °C	Electr. connection p. 596 f.
R2S 133	M2S 052-CA	A	1~ 230	50	280	2780	36	0.25	—	55	-25 to +40	B)
			1~ 230	60	320	3200	34	0.21	—	58	-25 to +60	

subject to alterations

Curves

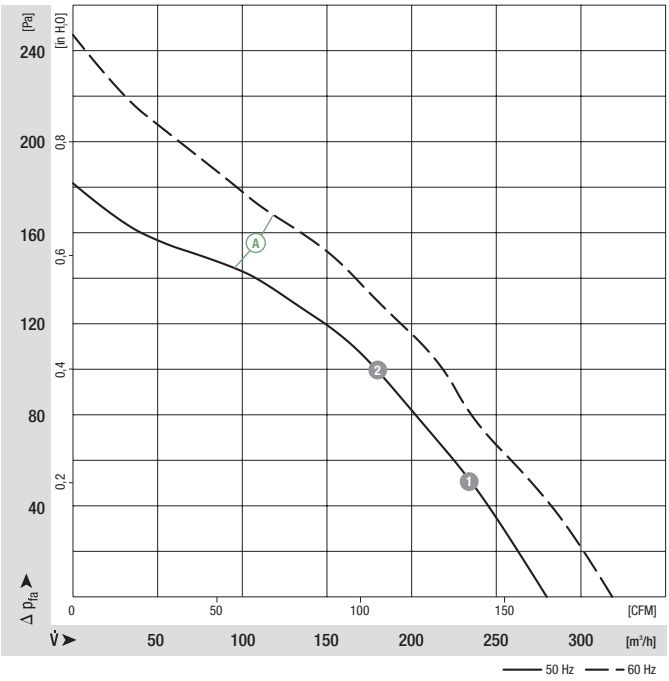

	n [rpm]	P_1 [W]	I [A]
A 1	2720	38	0.27
A 2	2720	38	0.27

ebmpapst

- **Motor protection:** TOP wired internally
- **Cable exit:** Axial
- **Protection class:** I
- **Product conforming to standards:** EN 60335-1, CE
- **Approvals:** CCC

Centrifugal fan	Mass of centrifugal fan kg	Inlet nozzle (long)
R2S 133-AE17 -05	0.9	09566-2-4013

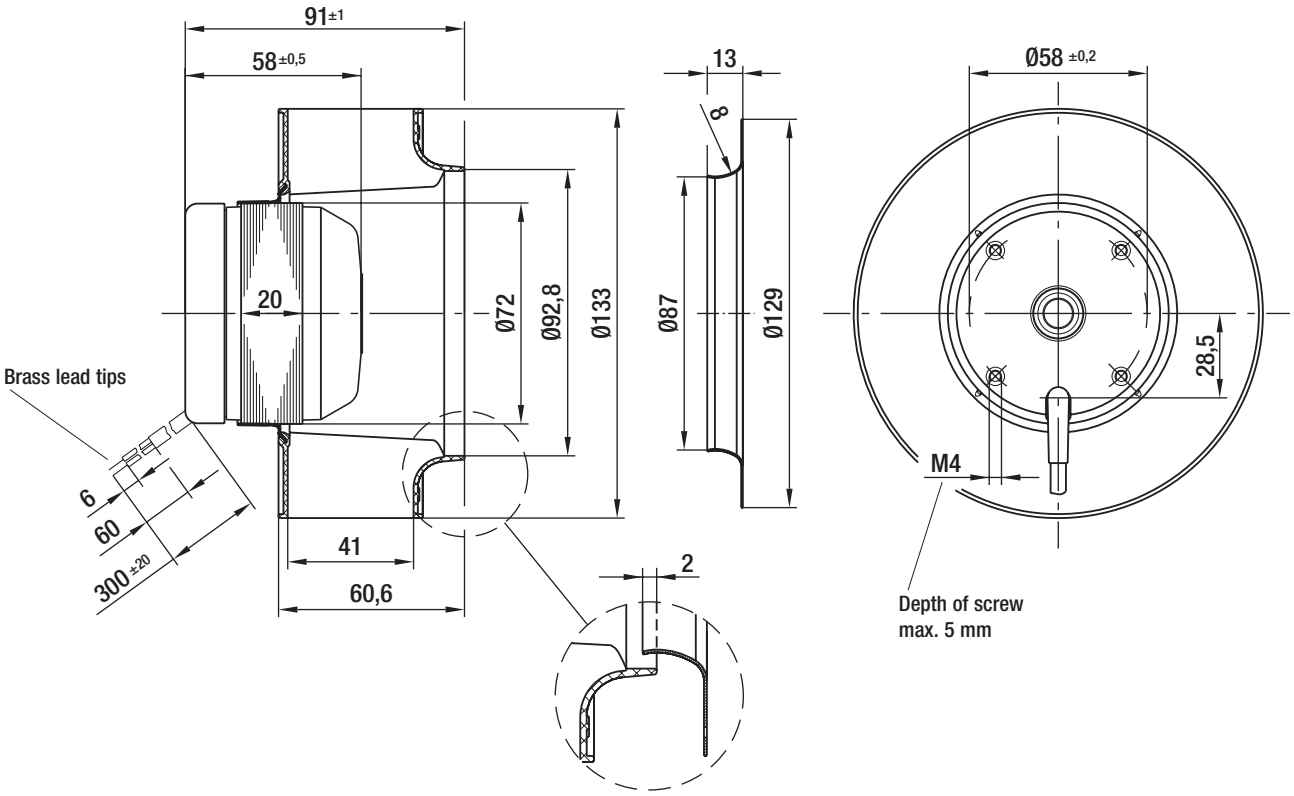

Inlet nozzle
p. 550

Electr. connections
p. 596 f.

AC centrifugal fans

backward curved, Ø 175

- **Material:** Impeller: PA plastic 6.6, fibreglass-reinforced
  Rotor: Coated in black
- **Number of blades:** 7
- **Direction of rotation:** Clockwise, seen on rotor
- **Type of protection:** Ⓐ IP 44, Ⓑ IP 20
- **Insulation class:** Ⓐ "F", Ⓑ "B"
- **Mounting position:** Any
- **Condensate discharges:** None
- **Mode of operation:** Continuous operation (S1)
- **Bearings:** Maintenance-free ball bearings

Nominal data

Type	Motor	Curve	Nominal voltage VAC	Frequency Hz	Air flow m³/h	Speed/rpm rpm	Power input W	Current draw A	Capacitor µF/VDB	Sound pressure level dB(A)	Perm. amb. temp. °C	Electr. connection p. 596 f.
R2E 175	M2E 052-CA	Ⓐ	1~ 230 1~ 230	50 60	490 570	2650 3100	50 51	0.25 0.23	1.5 / 400 1.5 / 400	63 68	-25 to +50 -25 to +80	A1)
R2S 175	M2S 052-CA	Ⓑ	1~ 230 1~ 230	50 60	440 430	2350 2300	53 51	0.33 0.29	— —	61 60	-25 to +40 -25 to +55	B)

subject to alterations

Curves

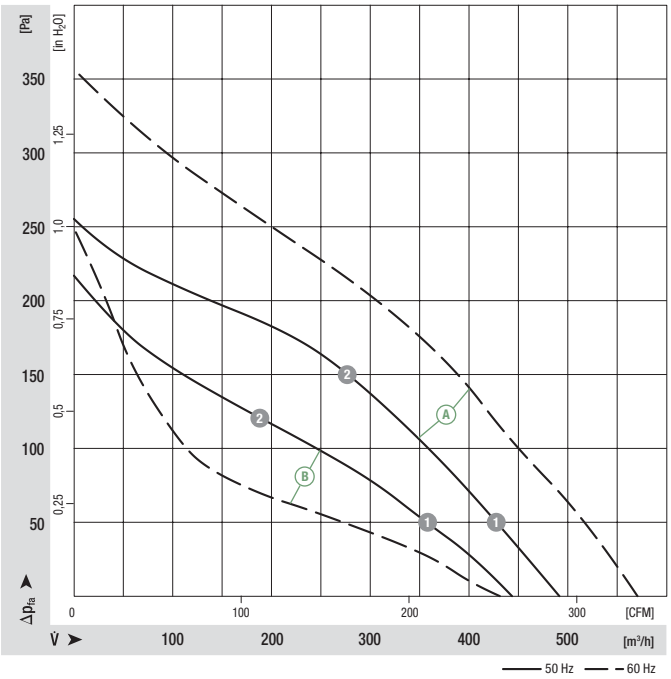

	n [rpm]	P_1 [W]	I [A]
Ⓐ ❶	2600	51	0.25
Ⓐ ❷	2530	53	0.26
Ⓑ ❶	2240	54	0.27
Ⓑ ❷	2120	56	0.28

ebmpapst

- **Motor protection:** TOP wired internally
- **Cable exit:** Ⓐ variable, Ⓑ axial
- **Protection class:** I
- **Product conforming to standards:** EN 60335-1, CE
- **Approvals:** CCC, Ⓑ also GOST

Centrifugal fan	Mass of centrifugal fan kg	Dimensions c	Dimensions l	Inlet nozzle (long)
R2E 175-AR72 -05	0.9	68.5	450.0	09576-2-4013
R2S 175-AB56 -01	0.9	69.0	400.0	09576-2-4013

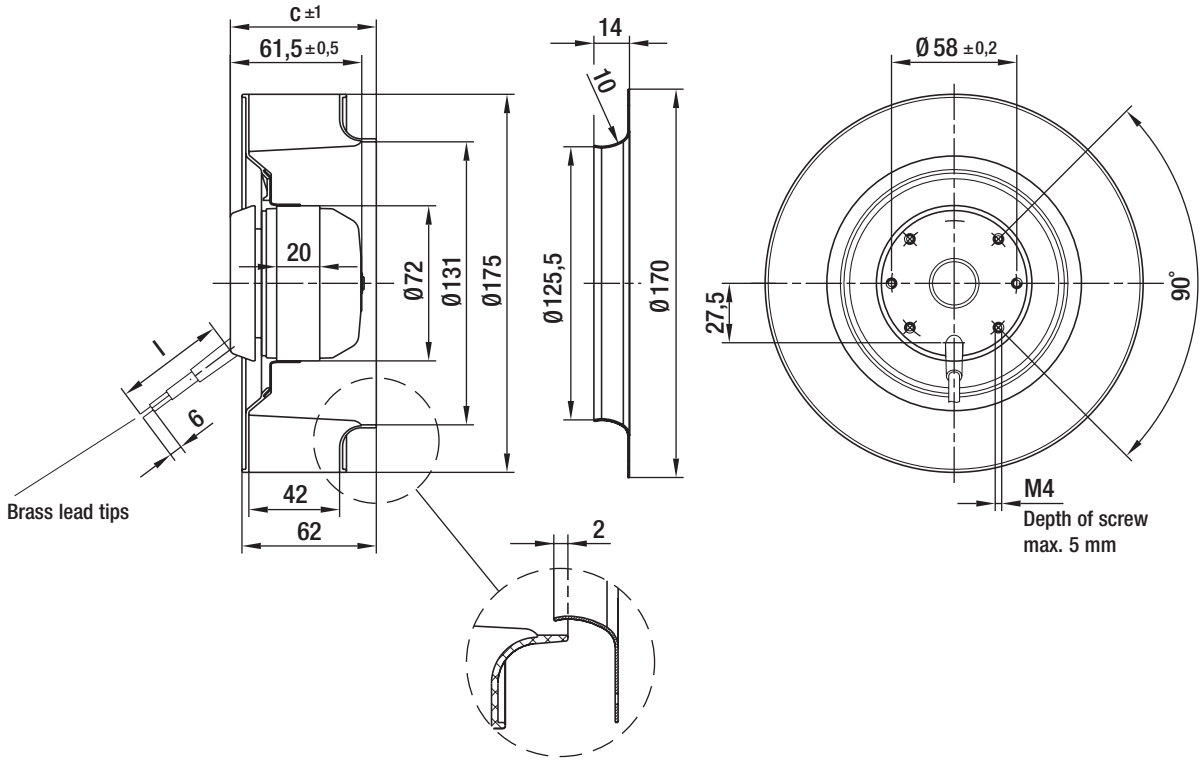

AC centrifugal fans

backward curved, Ø 190

- **Material:** Impeller: PA plastic 6.6, fibreglass-reinforced
  Rotor: Coated in black
- **Number of blades:** 7
- **Direction of rotation:** Clockwise, seen on rotor
- **Type of protection:** IP 44
- **Insulation class:** "B"
- **Mounting position:** Shaft horizontal or rotor on bottom; rotor on top on request
- **Condensate discharges:** Rotor-side
- **Mode of operation:** Continuous operation (S1)
- **Bearings:** Maintenance-free ball bearings

Nominal data

Type	Motor	Curve	Nominal voltage VAC	Frequency Hz	Air flow m³/h	Speed/rpm rpm	Power input W	Current draw A	Capacitor µF/VDB	Sound pressure level dB(A)	Perm. amb. temp. °C	Electr. connection p. 596 f.
R2E 190	M2E 068-BF	A	1~ 230	50	570	2500	58	0.26	2.0 / 400	62	-25 to +50	A1)
			1~ 230	60	620	2700	75	0.34	2.0 / 400	64	-25 to +55	

subject to alterations

Curves

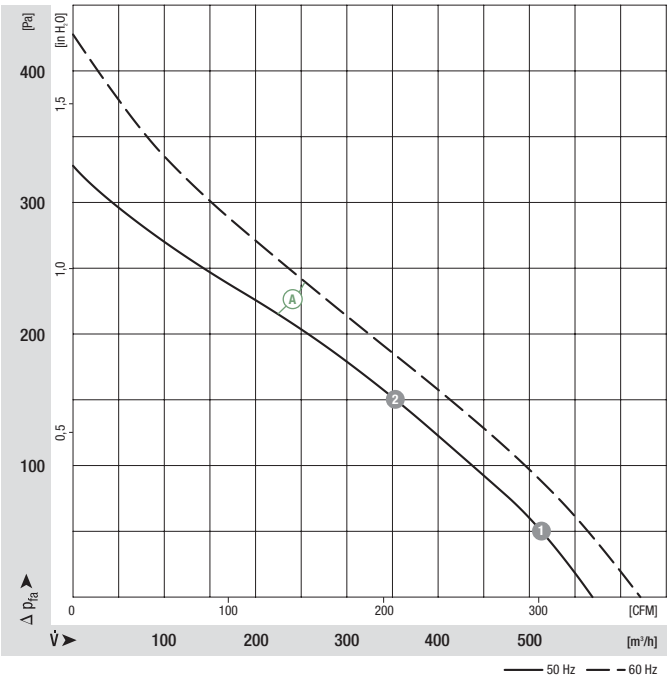

	n [rpm]	P_1 [W]	I [A]
A 1	2490	59	0.26
A 2	2410	61	0.27

ebmpapst

- **Motor protection:** TOP wired internally
- **Cable exit:** Variable
- **Protection class:** I
- **Product conforming to standards:** EN 60335-1, CE
- **Approvals:** CCC, GOST

Centrifugal fan	Mass of centrifugal fan kg	Inlet nozzle (long)
R2E 190-A026 -05	1.2	09576-2-4013

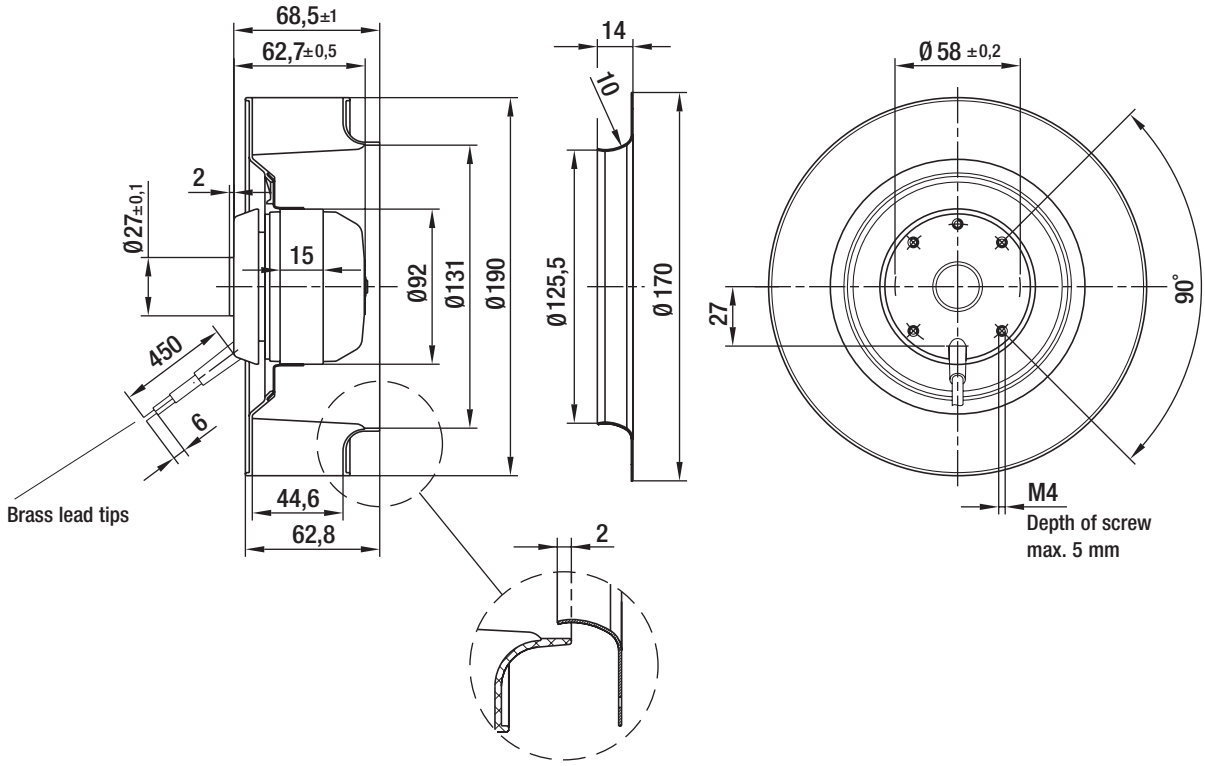

AC centrifugal fans

backward curved, Ø 220

- **Material:** Impeller: PA plastic 6.6, fibreglass-reinforced
  Rotor: Coated in black
- **Number of blades:** 11
- **Direction of rotation:** Clockwise, seen on rotor
- **Type of protection:** IP 44
- **Insulation class:** "B"
- **Mounting position:** Shaft horizontal or rotor on bottom; rotor on top on request
- **Condensate discharges:** Rotor-side
- **Mode of operation:** Continuous operation (S1)
- **Bearings:** Maintenance-free ball bearings

Nominal data

Type	Motor	Curve	Nominal voltage VAC	Frequency Hz	Air flow m³/h	Speed/rpm rpm	Power input W	Current draw A	Capacitor µF/VDB	Sound pressure level dB(A)	Perm. amb. temp. °C	Electr. connection p. 596 f.
R2E 220	M2E 068-BF	A	1~ 230 1~ 230	50 60	860 900	2600 2700	85 90	0.38 0.40	3.0 / 400 2.0 / 400	73 74	-25 to +40 -25 to +40	A1)
R2E 220	M2E 068-CF	B	1~ 230 1~ 230	50 60	885 990	2700 3050	85 115	0.38 0.51	2.5 / 400 2.5 / 400	72 75	-25 to +55 -25 to +55	A1)

subject to alterations

Curves

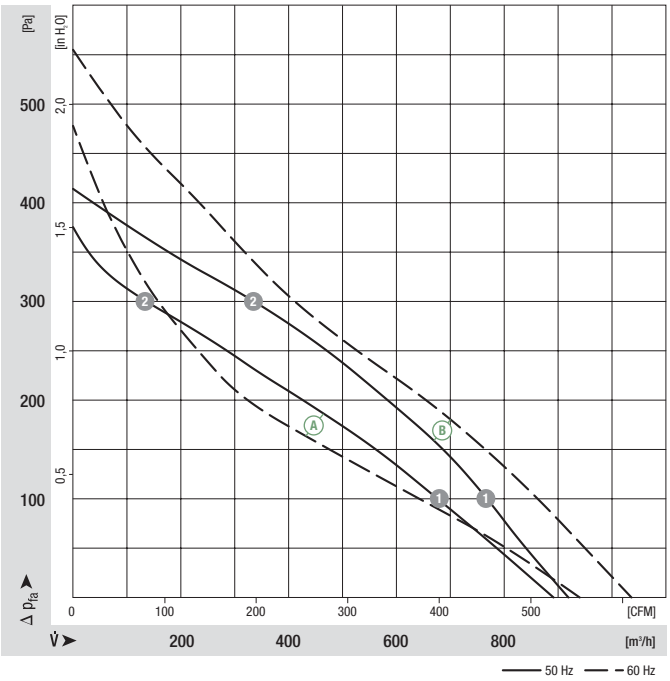

	n [rpm]	P_1 [W]	I [A]
A 1	2390	95	0.42
A 2	2490	90	0.40
B 1	2650	96	0.43
B 2	2600	102	0.46

ebmpapst

- **Motor protection:** TOP wired internally
- **Cable exit:** Variable
- **Protection class:** I
- **Product conforming to standards:** EN 60335-1, CE
- **Approvals:** CCC, GOST

Centrifugal fan	Mass of centrifugal fan kg	Dimensions d	Dimensions e	Inlet nozzle (long)
R2E 220-AA40 -05	1.3	63.0	15.0	09609-2-4013
R2E 220-AB06 -05	1.5	73.0	25.0	09609-2-4013

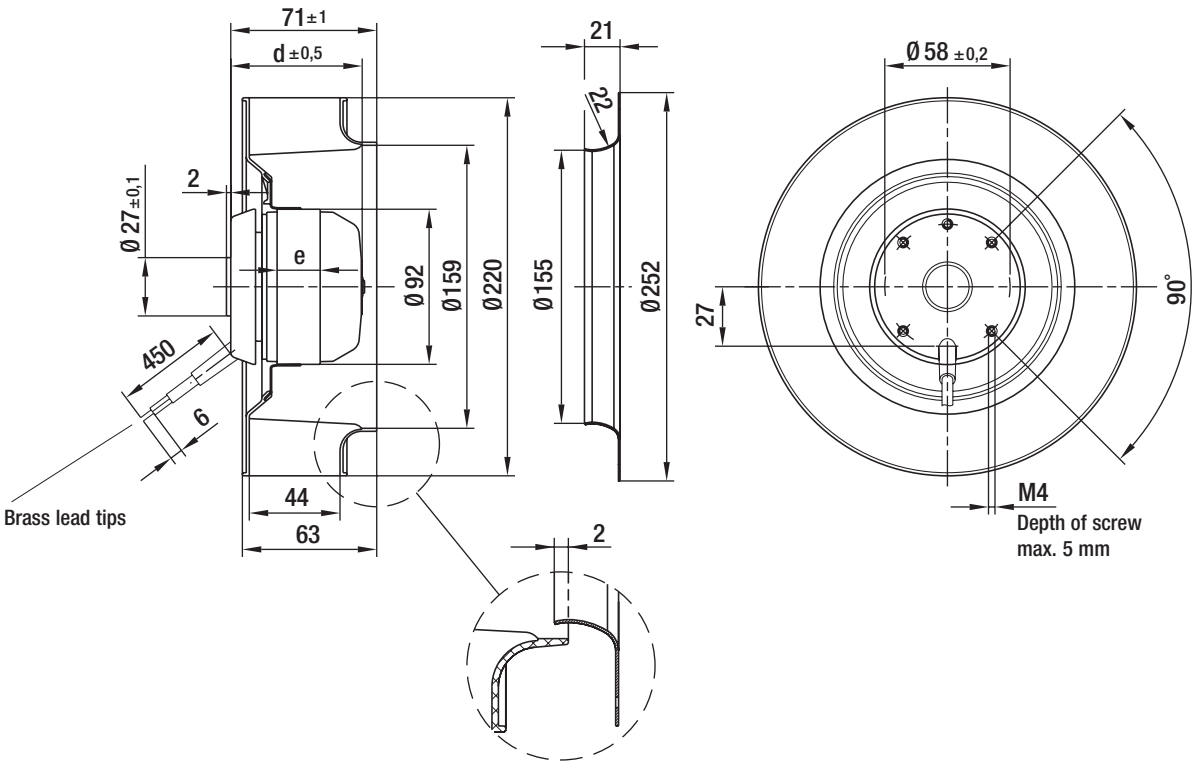

AC centrifugal fans

backward curved, Ø 225

- **Material:** Impeller: PA plastic 6.6, fibreglass-reinforced
  Rotor: Coated in black
- **Number of blades:** 11
- **Direction of rotation:** Clockwise, seen on rotor
- **Type of protection:** IP 44
- **Insulation class:** "B"
- **Mounting position:** Shaft horizontal or rotor on bottom; rotor on top on request
- **Condensate discharges:** Rotor-side
- **Mode of operation:** Continuous operation (S1)
- **Bearings:** Maintenance-free ball bearings

Nominal data

Type	Motor	Curve	Nominal voltage VAC	Frequency Hz	Air flow m³/h	Speed/rpm rpm	Power input W	Current draw A	Capacitor µF/VDB	Sound pressure level dB(A)	Perm. amb. temp. °C	Electr. connection p. 596 f.
R2E 225	M2E 068-DF	A	1~ 230 1~ 230	50 60	850 945	2650 2950	105 145	0.46 0.64	3.0 / 450 3.0 / 450	70 72	-25 to +60 -25 to +65	A1)
R2E 225	M2E 068-DF	B	1~ 230 1~ 230	50 60	1050 1160	2700 3000	115 165	0.51 0.72	3.0 / 450 3.0 / 450	72 75	-25 to +60 -25 to +30	A1)

subject to alterations

Curves

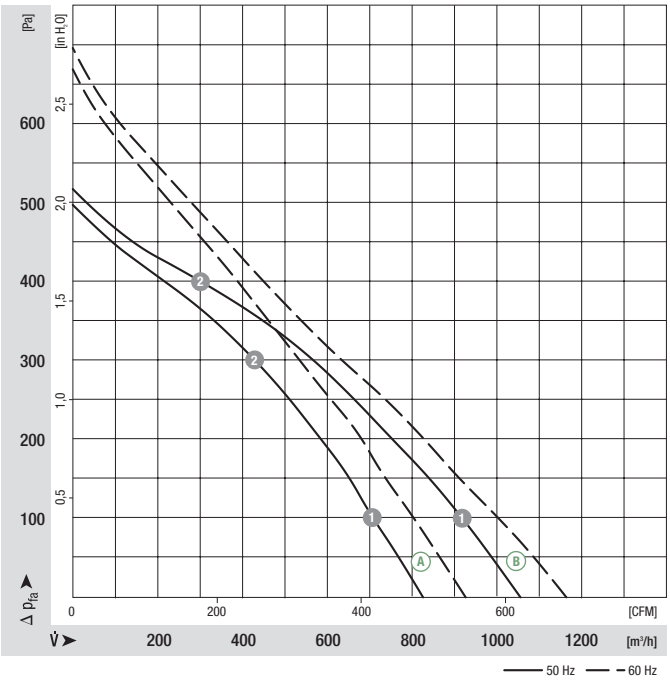

		n [rpm]	P_1 [W]	I [A]
A	1	2580	110	0.49
A	2	2560	113	0.50
B	1	2620	135	0.60
B	2	2670	124	0.55

ebmpapst

- **Motor protection:** TOP wired internally
- **Cable exit:** Variable
- **Protection class:** I
- **Product conforming to standards:** EN 60335-1, CE
- **Approvals:** CCC, ⓑ also GOST

Centrifugal fan	Mass of centrifugal fan kg	Dimensions b	c	g	Inlet nozzle (long)
R2E 225-AT51 -05	2.1	63.3	69.0	38.0	96358-2-4013
R2E 225-AX52 -05	2.1	75.3	85.0	50.0	96358-2-4013

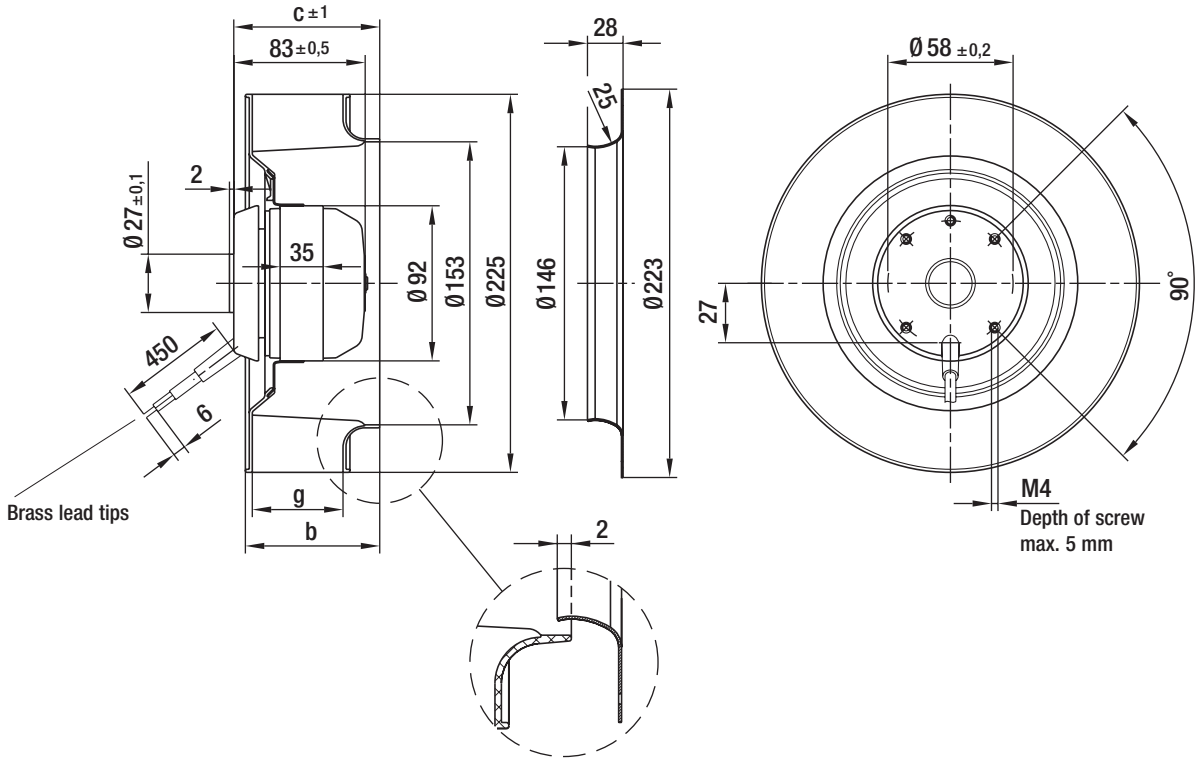

AC centrifugal fans

backward curved, Ø 225

- **Material:** Impeller: PA plastic 6.6, fibreglass-reinforced
  Rotor: Coated in black
- **Number of blades:** 7
- **Direction of rotation:** Clockwise, seen on rotor
- **Type of protection:** IP 44
- **Insulation class:** Ⓐ "F", Ⓑ "B"
- **Mounting position:** Shaft horizontal or rotor on bottom; rotor on top on request
- **Condensate discharges:** Rotor-side
- **Mode of operation:** Continuous operation (S1)
- **Bearings:** Maintenance-free ball bearings

Nominal data

Type	Motor	Curve	Nominal voltage VAC	Frequency Hz	Air flow m³/h	Speed/rpm rpm	Power input W	Current draw A	Capacitor µF/VDB	Sound pressure level dB(A)	Perm. amb. temp. °C	Electr. connection p. 596 f.
R2E 225	M2E 068-DF	Ⓐ	1~ 230 1~ 230	50 60	1200 1340	2650 2950	135 200	0.60 0.88	4.0 / 450 4.0 / 450	69 71	-25 to +60 -25 to +60	A1)
R4E 225	M4E 068-CF	Ⓑ	1~ 230 1~ 230	50 60	655 765	1420 1660	40 37	0.20 0.18	1.5 / 400 1.0 / 400	59 61	-25 to +50 -25 to +80	A1)

subject to alterations

Curves

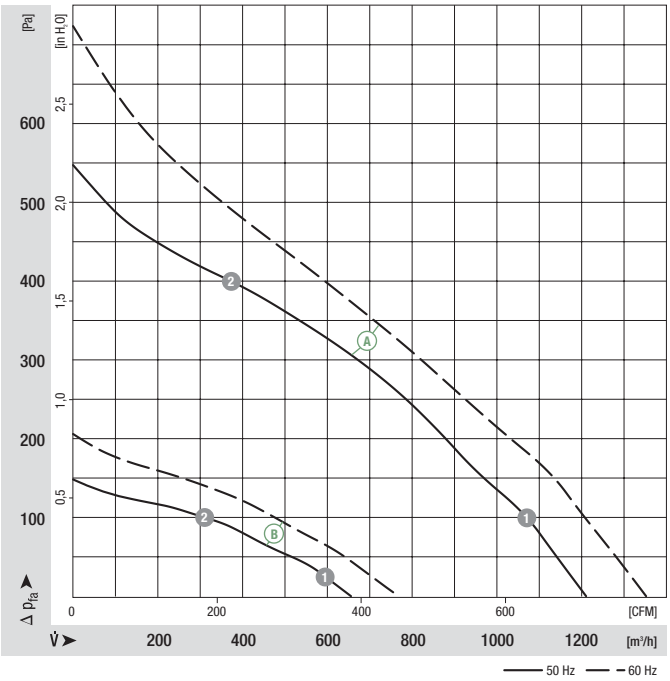

		n [rpm]	P_1 [W]	I [A]
Ⓐ	1	2610	146	0.66
Ⓐ	2	2650	138	0.61
Ⓑ	1	1410	41	0.20
Ⓑ	2	1400	43	0.21

ebmpapst

- **Motor protection:** TOP wired internally
- **Cable exit:** Ⓐ variable, Ⓑ axial
- **Protection class:** I
- **Product conforming to standards:** EN 60335-1, CE
- **Approvals:** CCC

Centrifugal fan	Mass of centrifugal fan kg	Dimensions d	Dimensions e	Inlet nozzle (long)
R2E 225-BD92 -09	2.1	83.0	35.0	96358-2-4013
R4E 225-AT01 -05	1.8	72.6	25.0	96358-2-4013

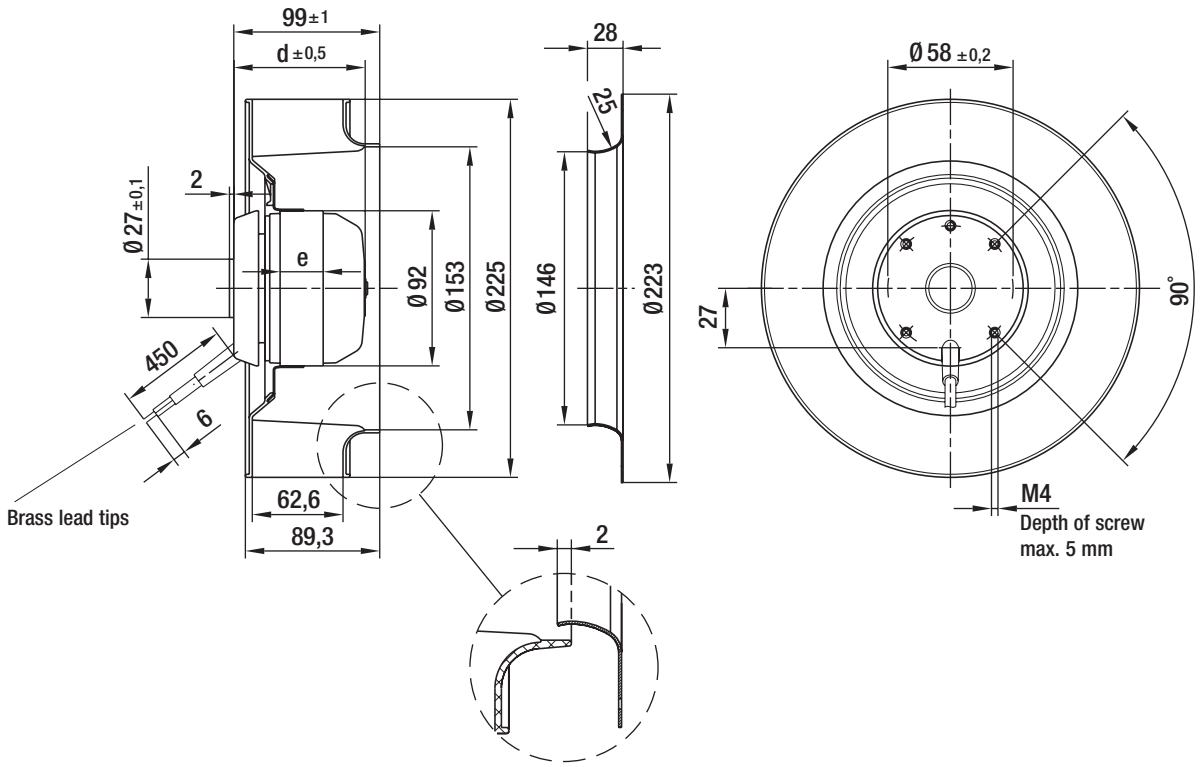

AC centrifugal fans

backward curved, Ø 250

- **Material:** Impeller: PA plastic 6.6, fibreglass-reinforced
  Rotor: Coated in black
- **Number of blades:** 11
- **Direction of rotation:** Clockwise, seen on rotor
- **Type of protection:** IP 44
- **Insulation class:** Ⓐ "F", Ⓑ Ⓒ "B"
- **Mounting position:** Shaft horizontal or rotor on bottom; rotor on top on request
- **Condensate discharges:** Rotor-side
- **Mode of operation:** Continuous operation (S1)
- **Bearings:** Maintenance-free ball bearings

Nominal data

Type	Motor	Curve	Nominal voltage VAC	Frequency Hz	Air flow m³/h	Speed/rpm rpm	Power input W	Current draw A	Capacitor µF/VDB	Sound pressure level dB(A)	Perm. amb. temp. °C	Electr. connection p. 596 f.
R2E 250	M2E 068-EC	Ⓐ	1~ 230 1~ 230	50 60	1450 1490	2600 2700	155 215	0.70 0.95	5.0 / 400 5.0 / 400	75 76	-25 to +70 -25 to +45	A1)
R2E 250	M2E 068-DF	Ⓑ	1~ 230 1~ 230	50 60	1230 1335	2550 2750	115 160	0.51 0.71	4.0 / 400 4.0 / 400	71 72	-25 to +65 -25 to +45	A1)
R4E 250	M4E 068-CF	Ⓒ	1~ 230 1~ 230	50 60	810 930	1400 1600	43 43	0.20 0.20	1.5 / 400 1.0 / 400	61 64	-25 to +70 -25 to +80	A1)

subject to alterations

Curves

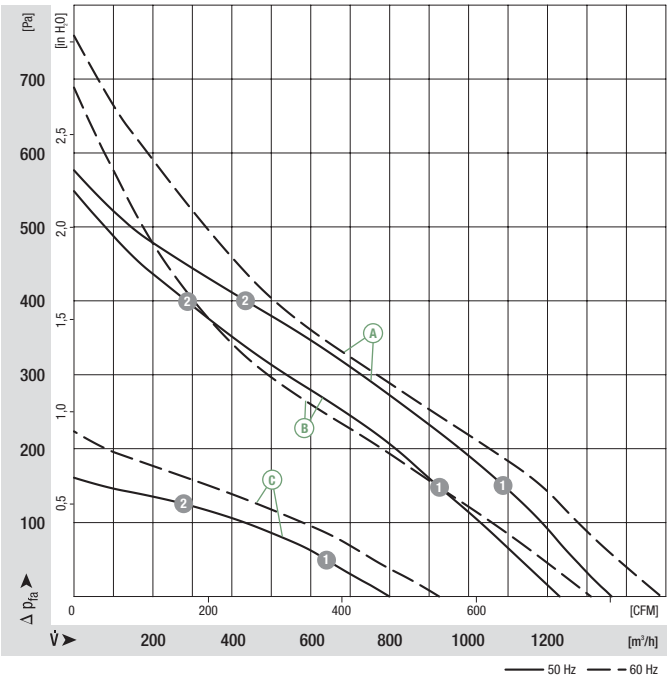

		n [rpm]	P_1 [W]	I [A]
Ⓐ	1	2400	152	0.69
Ⓐ	2	2400	152	0.69
Ⓑ	1	2350	137	0.61
Ⓑ	2	2435	127	0.56
Ⓒ	1	1385	46	0.21
Ⓒ	2	1370	47	0.21

ebmpapst

- **Motor protection:** TOP wired internally
- **Cable exit:** Ⓐ Ⓑ **variable,** Ⓒ axial
- **Protection class:** I
- **Product conforming to standards:** EN 60335-1, CE
- **Approvals:** CCC, Ⓐ Ⓒ also GOST

Centrifugal fan	Mass of centrifugal fan kg	Dimensions b	c	d	e	g	k	Inlet nozzle (long)
R2E 250-AS47 -26	3.1	84.3	99.0	97.5	42.0	56.0	27.0	96359-2-4013
R2E 250-AV65 -01	2.6	73.3	89.0	83.0	35.0	45.0	27.0	96359-2-4013
R4E 250-AH01 -05	2.2	84.3	99.0	72.6	25.0	56.0	29.0	96359-2-4013

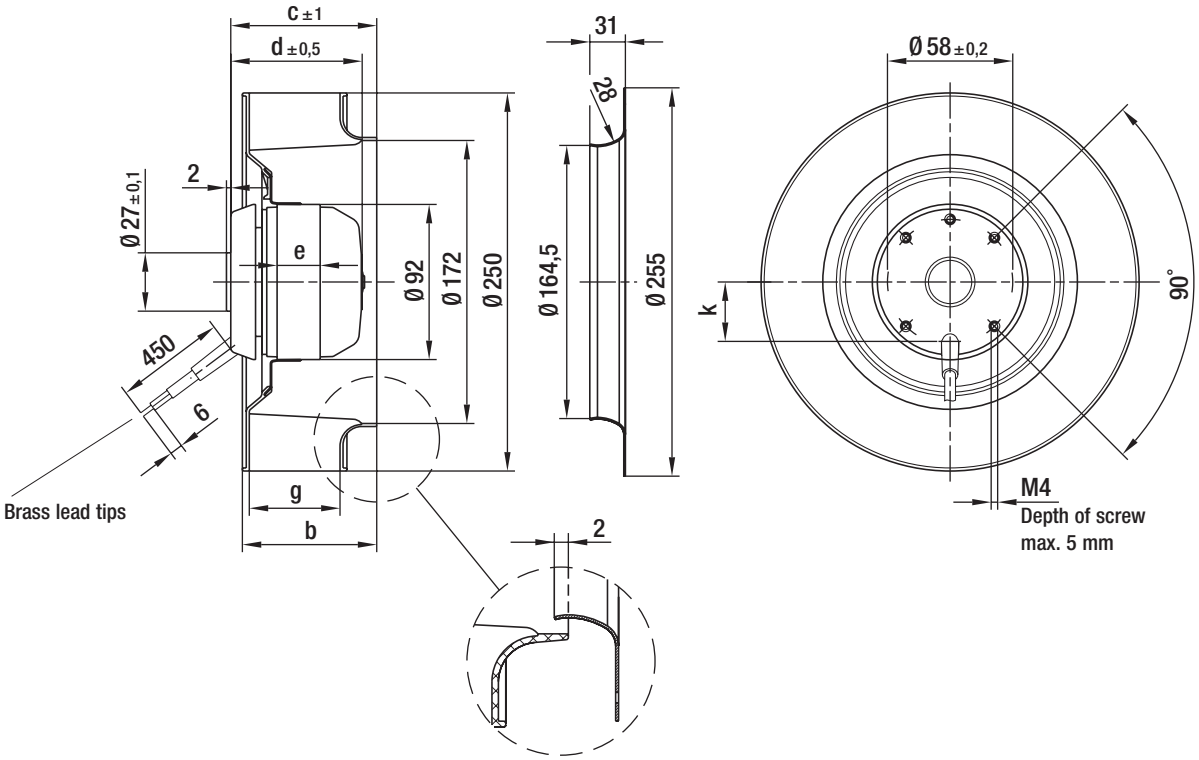

AC centrifugal fans

backward curved, Ø 310

- **Material:** Impeller: PA plastic 6.6
  Rotor: Coated in black
- **Number of blades:** 6
- **Direction of rotation:** Clockwise, seen on rotor
- **Type of protection:** IP 44
- **Insulation class:** "B"
- **Mounting position:** Shaft horizontal or rotor on bottom; rotor on top on request
- **Condensate discharges:** Rotor-side
- **Mode of operation:** Continuous operation (S1)
- **Bearings:** Maintenance-free ball bearings

Nominal data

Type	Motor	Curve	Nominal voltage VAC	Frequency Hz	Air flow m³/h	Speed/rpm rpm	Power input W	Current draw A	Capacitor µF/VDB	Sound pressure level dB(A)	Perm. amb. temp. °C	Electr. connection p. 596 f.
R4E 310	M4E 068-EC	A	1~ 230	50	1830	1400	105	0.50	4.0 / 400	63	-25 to +55	A1)
			1~ 230	60	2070	1600	140	0.62	4.0 / 400	66	-25 to +55	

subject to alterations

Curves

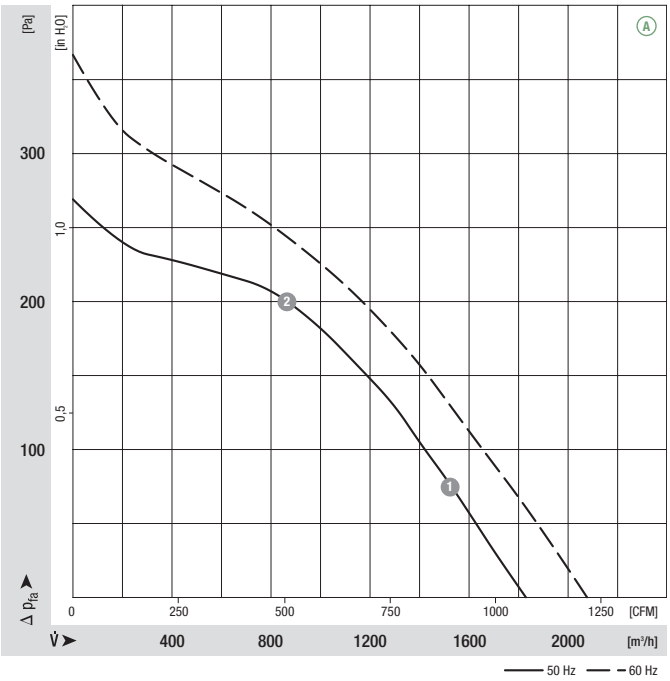

	n [rpm]	P_1 [W]	I [A]
A 1	1380	118	0.56
A 2	1360	127	0.60

ebmpapst

- **Motor protection:** TOP wired internally
- **Cable exit:** Axial
- **Protection class:** I
- **Product conforming to standards:** EN 60335-1, CE
- **Approvals:** CCC

Centrifugal fan	Mass of centrifugal fan kg	Inlet nozzle (long)
R4E 310-AT06 -01	3.5	97512-2-4013

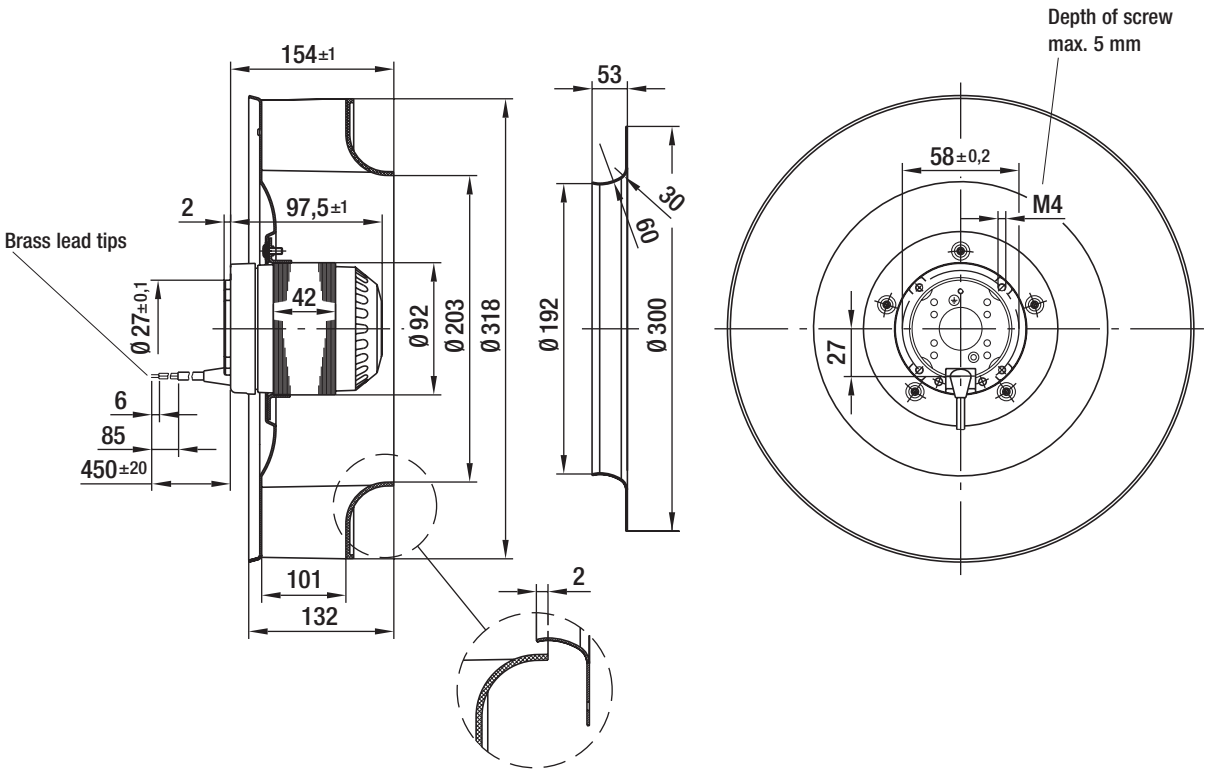

AC centrifugal fans

backward curved, Ø 330

- **Material:** Impeller: PA plastic 6.6
  Rotor: Coated in black
- **Number of blades:** 6
- **Direction of rotation:** Clockwise, seen on rotor
- **Type of protection:** IP 44
- **Insulation class:** "B"
- **Mounting position:** Shaft horizontal or rotor on bottom; rotor on top on request
- **Condensate discharges:** Rotor-side
- **Mode of operation:** Continuous operation (S1)
- **Bearings:** Maintenance-free ball bearings

Nominal data

Type	Motor	Curve	Nominal voltage VAC	Frequency Hz	Air flow m³/h	Speed/rpm rpm	Power input W	Current draw A	Capacitor µF/VDB	Sound pressure level dB(A)	Perm. amb. temp. °C	Electr. connection p. 596 f.
R4E 330	M4E 074-DF	A	1~ 230	50	1760	1450	95	0.44	4.0 / 400	66	-25 to +60	A1)
			1~ 230	60	2070	1700	135	0.61	4.0 / 400	69	-25 to +40	

subject to alterations

Curves

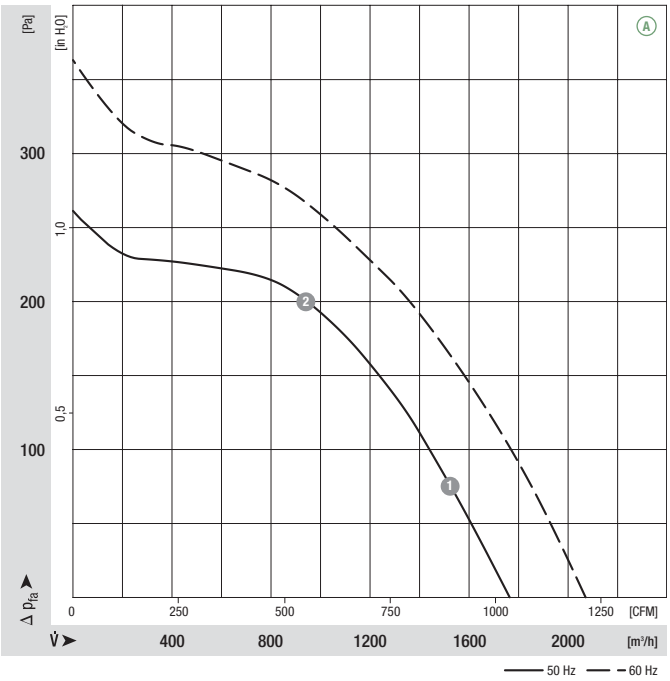

	n [rpm]	P_1 [W]	I [A]
A 1	1420	112	0.52
A 2	1395	128	0.59

ebmpapst

- **Motor protection:** TOP wired internally
- **Cable exit:** Variable
- **Protection class:** I
- **Product conforming to standards:** EN 60335-1, CE
- **Approvals:** CCC

Centrifugal fan	Mass of centrifugal fan kg	Inlet nozzle (long)
R4E 330-AA06 -05	3.6	51357-2-4013

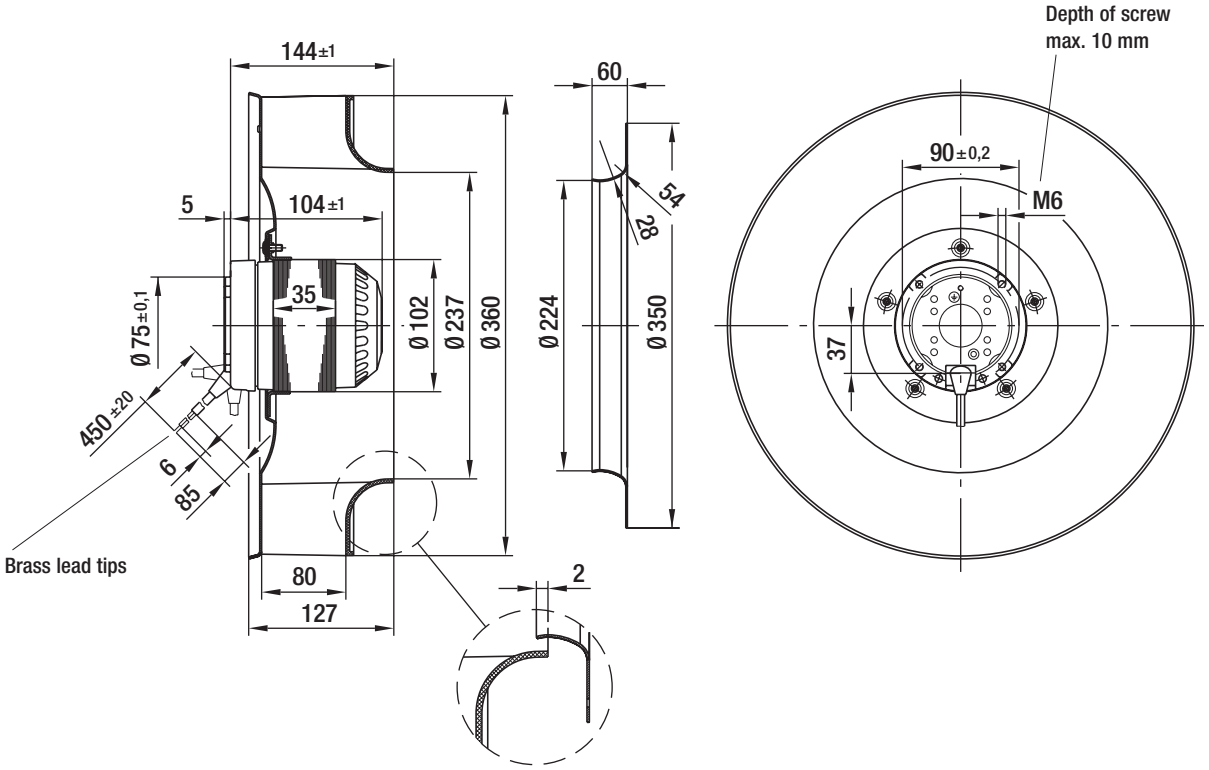

AC centrifugal fans

backward curved, Ø 355

- **Material:** Impeller: PA plastic 6.6
  Rotor: Coated in black
- **Number of blades:** 6
- **Direction of rotation:** Clockwise, seen on rotor
- **Type of protection:** IP 44
- **Insulation class:** "B"
- **Mounting position:** Shaft horizontal or rotor on bottom; rotor on top on request
- **Condensate discharges:** Rotor-side
- **Mode of operation:** Continuous operation (S1)
- **Bearings:** Maintenance-free ball bearings

Nominal data

Type	Motor	Curve	Nominal voltage VAC	Frequency Hz	Air flow m³/h	Speed/rpm rpm	Power input W	Current draw A	Capacitor µF/VDB	Sound pressure level dB(A)	Perm. amb. temp. °C	Electr. connection p. 596 f.
R4E 355	M4E 074-EI	A	1~ 230 1~ 230	50 60	2365 2740	1410 1630	170 250	0.78 1.10	6.0 / 400 6.0 / 400	66 70	-25 to +55 -25 to +40	A1)
R4E 355	M4E 074 -GA	B	1~ 230 1~ 230	50 60	2740 3190	1400 1630	215 300	1.00 1.32	7.0 / 400 7.0 / 400	68 68	-25 to +50 -25 to +30	A1)
R6E 355	M6E 074-DF	C	1~ 230 1~ 230	50 60	1875 2050	910 1000	65 90	0.29 0.40	2.0 / 400 2.0 / 400	61 62	-25 to +70 -25 to +50	A1)

subject to alterations

Curves

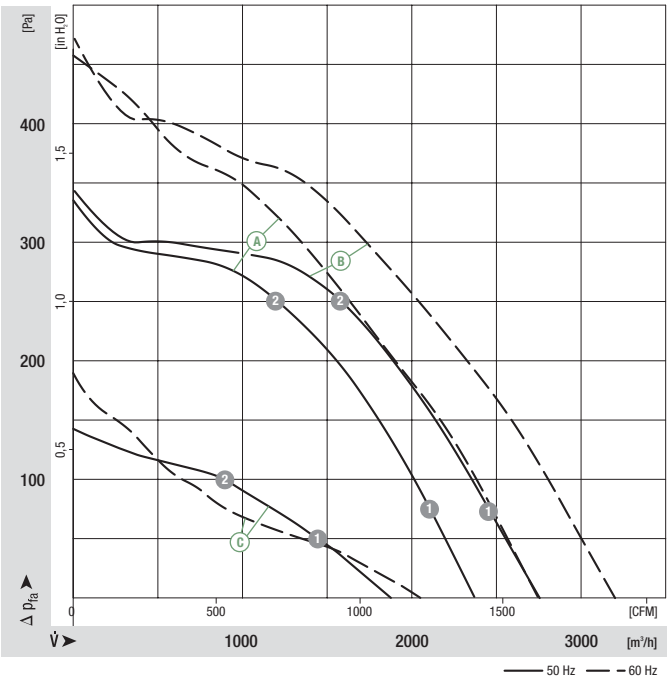

	n [rpm]	P_1 [W]	I [A]
A 1	1390	190	0.82
A 2	1360	212	0.94
B 1	1390	228	1.06
B 2	1360	259	1.20
C 1	870	73	0.33
C 2	835	77	0.36

ebmpapst

- **Motor protection:** TOP wired internally
- **Cable exit:** Variable
- **Protection class:** I
- **Product conforming to standards:** EN 60335-1, CE
- **Approvals:** CCC

Centrifugal fan	Mass of centrifugal fan kg	Dimensions b	c	d	e	g	Inlet nozzle (long)
R4E 355-AF05 -05	4.4	148.5	165.5	117.0	48.0	101.5	51357-2-4013
R4E 355-AG01 -05	4.5	173.0	190.0	129.0	60.0	126.0	51357-2-4013
R6E 355-AB16 -05	4.0	173.0	190.0	104.0	35.0	126.0	51357-2-4013

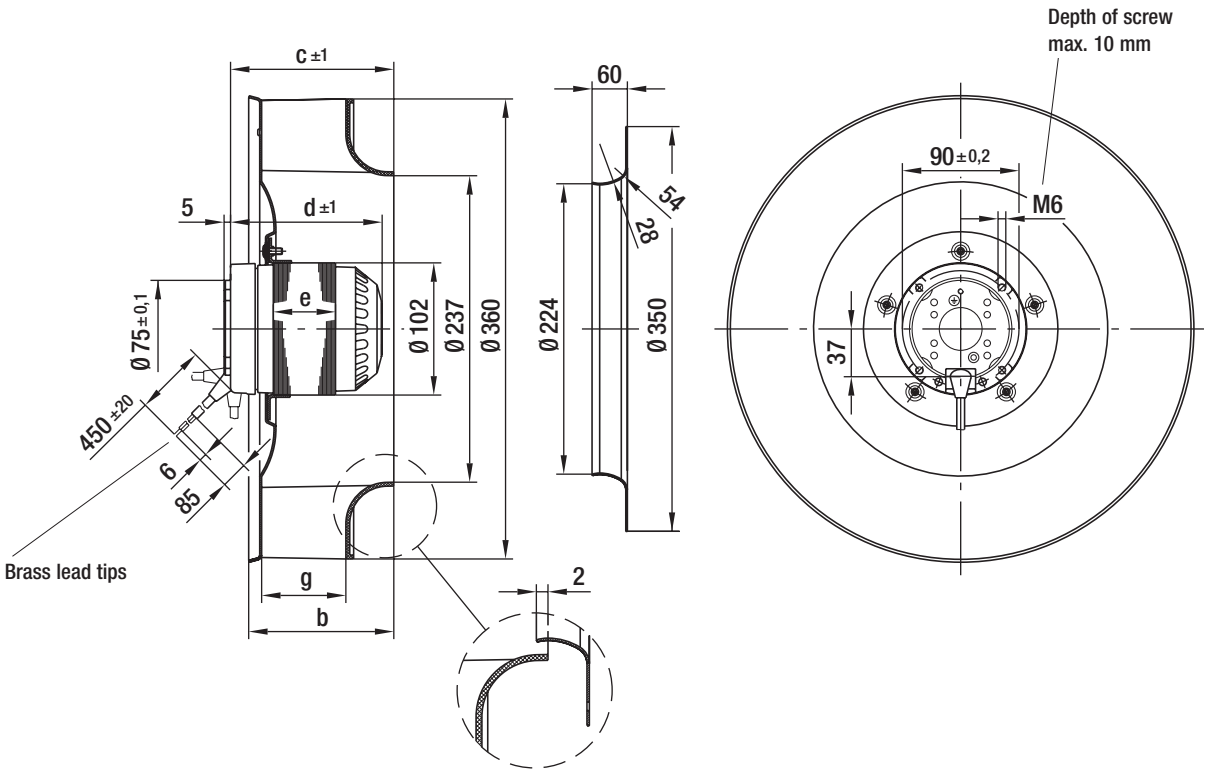

AC centrifugal fans

backward curved, Ø 250

- **Material:** Impeller: Sheet steel, coated in black
  Rotor: Coated in black
- **Number of blades:** 11
- **Direction of rotation:** Clockwise, seen on rotor
- **Type of protection:** IP 44
- **Insulation class:** "B"
- **Mounting position:** Shaft horizontal or rotor on bottom; rotor on top on request
- **Condensate discharges:** Rotor-side
- **Mode of operation:** Continuous operation (S1)
- **Bearings:** Maintenance-free ball bearings

Nominal data		Curve	Nominal voltage	Frequency	Air flow	Speed/rpm	Power input	Current draw	Capacitor	Sound pressure level	Perm. amb. temp.	Electr. connection
Type	**Motor**		**VAC**	**Hz**	**m³/h**	**rpm**	**W**	**A**	**µF/VDB**	**dB(A)**	**°C**	p. 596 f.
R2E 250	M2E 068-EC	A	1~ 230	50	1780	2650	185	0.81	6.0 / 400	72	-25 to +50	A1)

subject to alterations

Curves

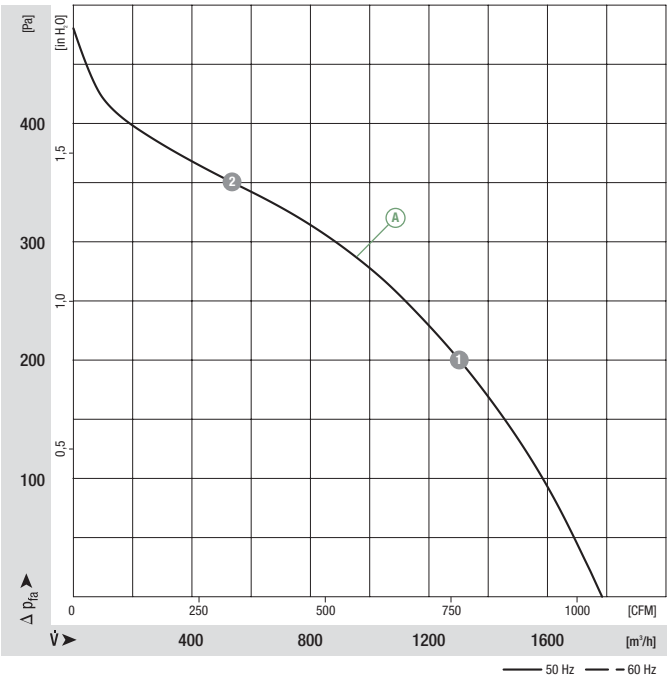

	n [rpm]	P_1 [W]	I [A]
A 1	2510	220	0.97
A 2	2615	190	0.84

ebmpapst

- **Motor protection:** TOP wired internally
- **Cable exit:** Variable
- **Protection class:** I
- **Product conforming to standards:** EN 60335-1, CE
- **Approvals:** CCC

Centrifugal fan	Mass of centrifugal fan kg	Inlet nozzle (long)
R2E 250-AW50-05	3.1	96359-2-4013

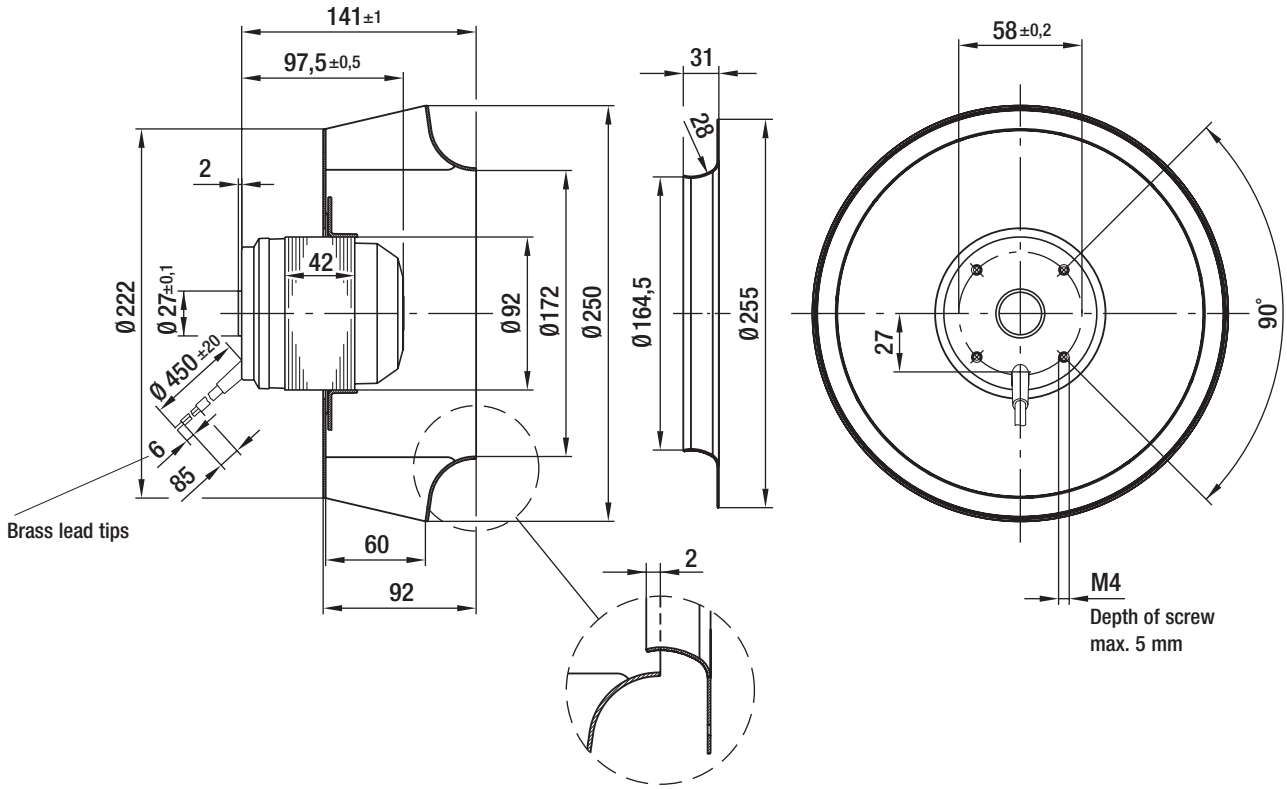

AC centrifugal fans

backward curved, Ø 270

- **Material:** Impeller: Sheet steel
  Rotor: Coated in black
- **Number of blades:** 11
- **Direction of rotation:** Clockwise, seen on rotor
- **Type of protection:** IP 44
- **Insulation class:** "F"
- **Mounting position:** Shaft horizontal or rotor on bottom; rotor on top on request
- **Condensate discharges:** Rotor-side
- **Mode of operation:** Continuous operation (S1)
- **Bearings:** Maintenance-free ball bearings

Nominal data

Type	Motor	Curve	Nominal voltage VAC	Frequency Hz	Air flow m³/h	Speed/rpm rpm	Power input W	Current draw A	Capacitor µF/VDB	Sound pressure level dB(A)	Perm. amb. temp. °C	Electr. connection p. 596 f.
R2E 270	M2E 074-GA	A	1~ 230	50	2435	2750	280	1.23	10.0 / 400	77	-25 to +60	A1)
			1~ 230	60	2760	3100	430	1.88	10.0 / 400	80	-25 to +60	

subject to alterations

Curves

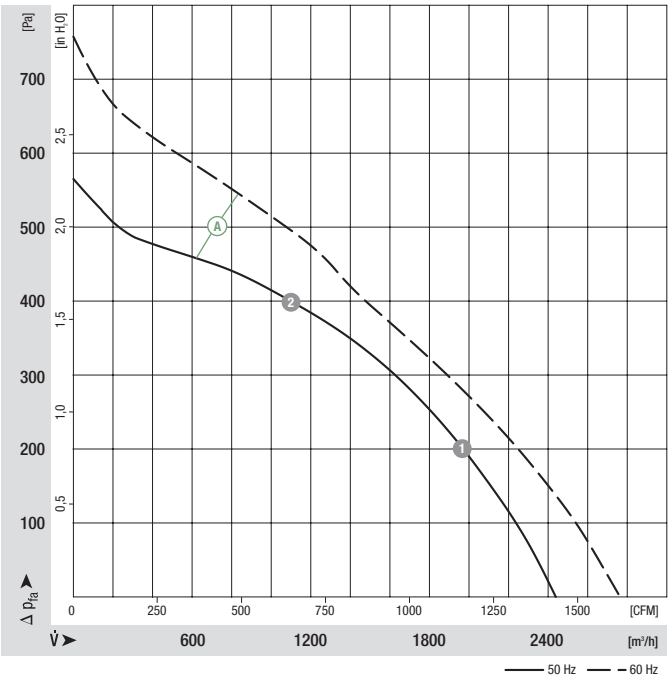

	n [rpm]	P_1 [W]	I [A]
A 1	2665	245	1.08
A 2	2690	332	1.47

ebmpapst

- **Motor protection:** TOP wired internally
- **Cable exit:** Variable
- **Protection class:** I
- **Capacitor:** FPU (P2) acc. to IEC 252
- **Product conforming to standards:** EN 60335-1, CE
- **Approvals:** CCC

Centrifugal fan	Mass of centrifugal fan kg	Inlet nozzle (long)
R2E 270-AA01 -05	4.7	96360-2-4013

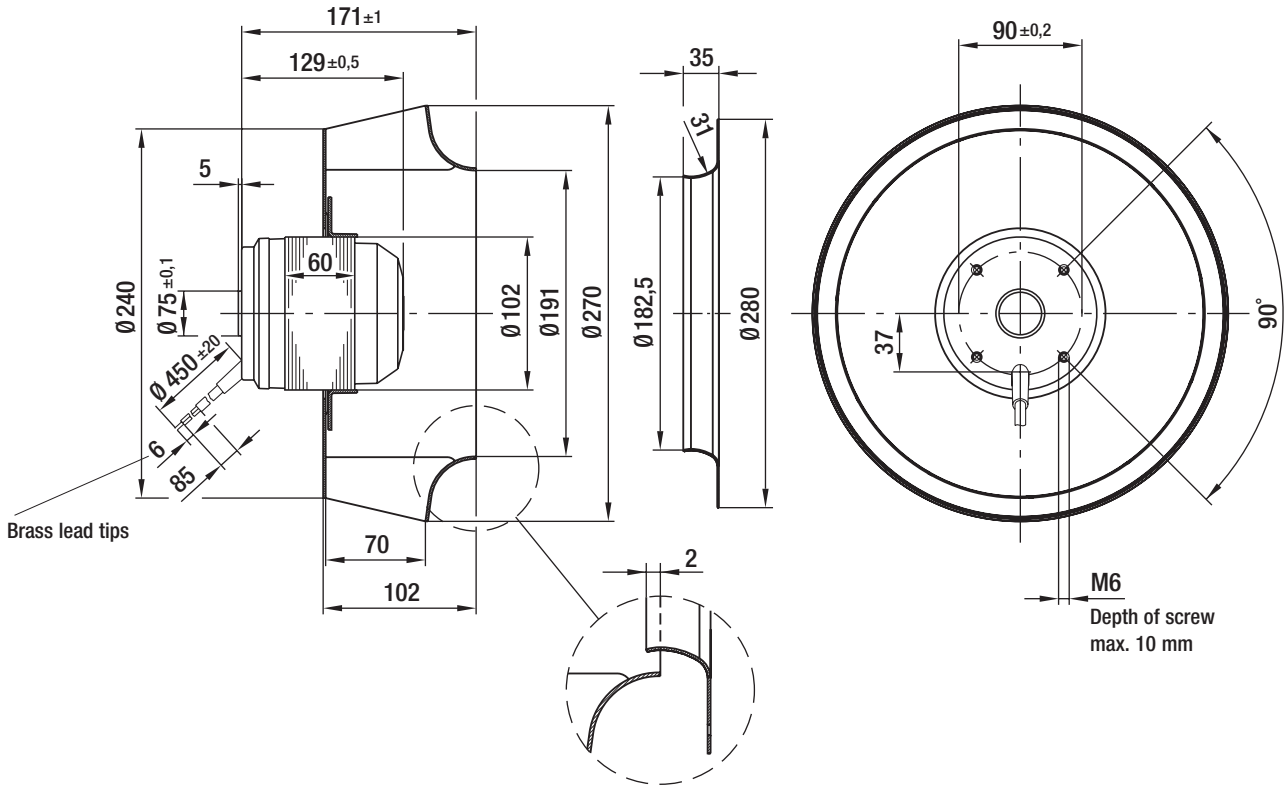

AC centrifugal fans

backward curved, Ø 280

- **Material:** Impeller: Sheet steel, galvanised
  Rotor: Coated in black
- **Number of blades:** 11
- **Direction of rotation:** Clockwise, seen on rotor
- **Type of protection:** IP 44
- **Insulation class:** "F"
- **Mounting position:** Shaft horizontal or rotor on bottom; rotor on top on request
- **Condensate discharges:** Rotor-side
- **Mode of operation:** Continuous operation (S1)
- **Bearings:** Maintenance-free ball bearings

Nominal data

Type	Motor	Curve	Nominal voltage VAC	Frequency Hz	Air flow m³/h	Speed/rpm rpm	Power input W	Current draw A	Capacitor µF/VDB	Sound pressure level dB(A)	Perm. amb. temp. °C	Electr. connection p. 596 f.
R2D 280	M2D 074-EI	A	3~ 400 Δ	50	1790	2730	210	0.37	—	79	-25 to +80	F1a)/F2a)
		B	3~ 400 Y	50	1460	2200	160	0.25	—	75	-25 to +70	

subject to alterations

Curves

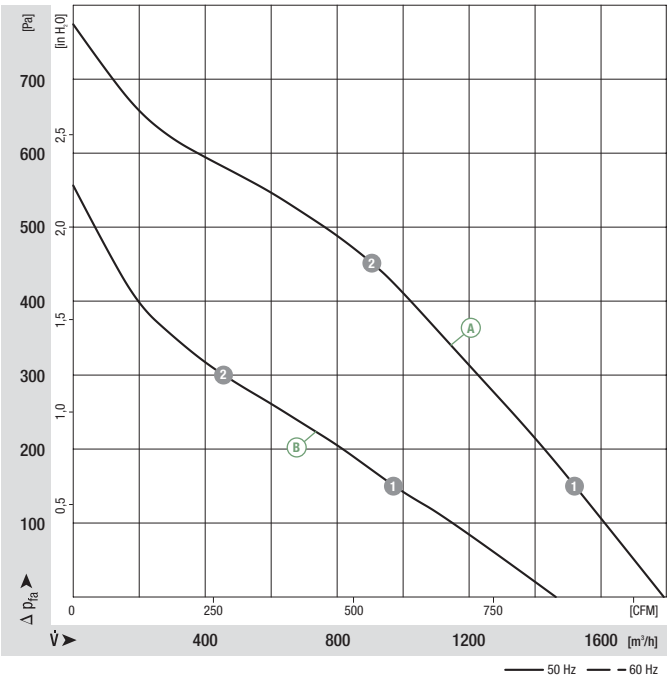

		n [rpm]	P_1 [W]	I [A]
A	1	2650	252	0.44
A	2	2550	302	0.53
B	1	1960	187	0.30
B	2	1975	185	0.29

ebmpapst

- **Motor protection:** Design with thermal overload protector
- **Cable exit:** Variable
- **Protection class:** I
- **Product conforming to standards:** EN 60335-1, CE

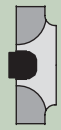

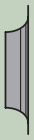

Centrifugal fan	Mass of centrifugal fan kg	Inlet nozzle (long)
R2D 280-AF10 -09	4.6	96360-2-4013

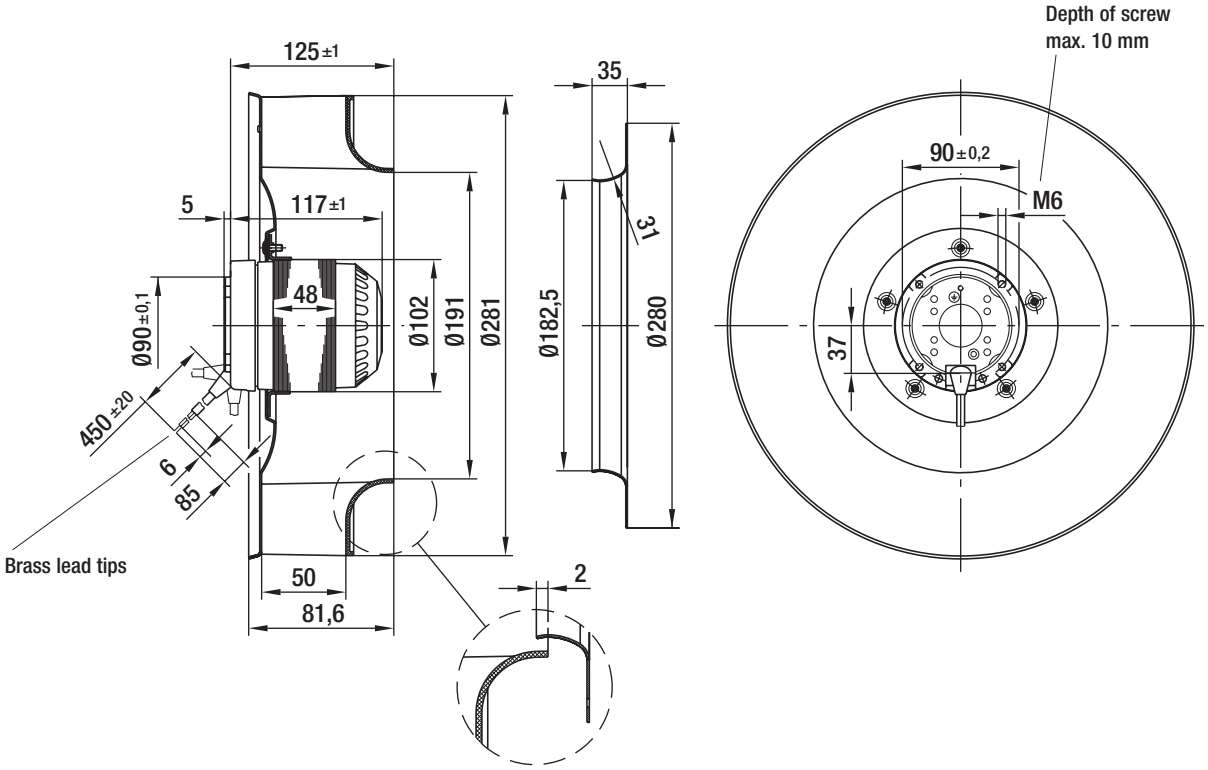

AC centrifugal fans

backward curved, Ø 280

- **Material:** Impeller: Sheet steel, coated in black
  Rotor: Coated in black
- **Number of blades:** 11
- **Direction of rotation:** Clockwise, seen on rotor
- **Type of protection:** IP 44
- **Insulation class:** Ⓐ "F", Ⓑ "B"
- **Mounting position:** Shaft horizontal or rotor on bottom; rotor on top on request
- **Condensate discharges:** Rotor-side
- **Mode of operation:** Continuous operation (S1)
- **Bearings:** Maintenance-free ball bearings

Nominal data

Type	Motor	Curve	Nominal voltage VAC	Frequency Hz	Air flow m³/h	Speed/rpm rpm	Power input W	Current draw A	Capacitor µF/VDB	Sound pressure level dB(A)	Perm. amb. temp. °C	Electr. connection p. 596 f.
R2E 280	M2E 068-EC	Ⓐ	1~ 230	50	2110	2700	225	1.00	7.0 / 400	76	-25 to +40	A1)
R4E 280	M4E 068-DF	Ⓑ	1~ 230 1~ 230	50 60	1435 1685	1420 1635	78 105	0.35 0.42	2.5 / 450 2.5 / 450	62 67	-25 to +40 -25 to +40	A1)

subject to alterations

Curves

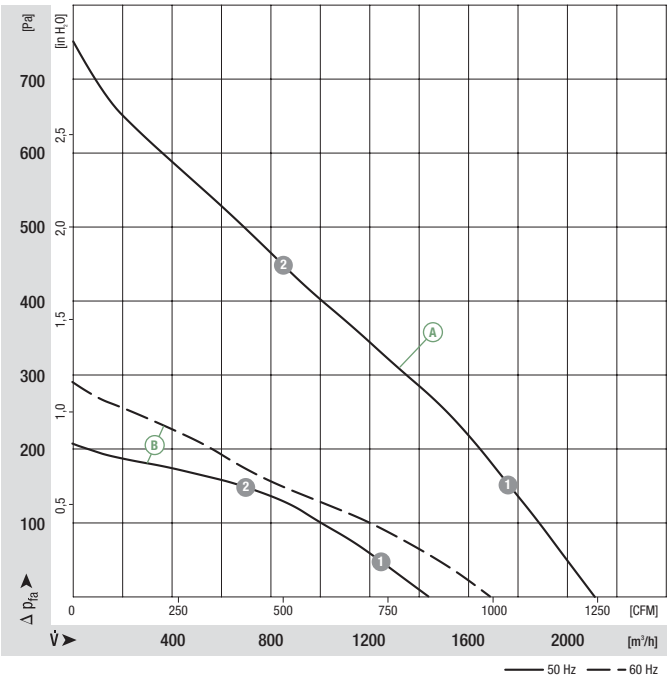

		n [rpm]	P_1 [W]	I [A]
Ⓐ	❶	2560	265	1.18
Ⓐ	❷	2390	312	1.38
Ⓑ	❶	1380	88	0.40
Ⓑ	❷	1340	99	0.44

ebmpapst

- **Motor protection:** TOP wired internally
- **Cable exit:** Ⓐ variable, Ⓑ axial
- **Protection class:** I
- **Capacitor:** Ⓐ FPU (P2) acc. to IEC 252
- **Product conforming to standards:** EN 60335-1, CE
- **Approvals:** CCC, GOST

Centrifugal fan	Mass of centrifugal fan kg	Dimensions b	d	e	g	Inlet nozzle (long)
R2E 280-AE52 -05	3.0	81.6	97.5	42.0	50.0	96360-2-4013
R4E 280-AD08 -05	2.8	111.4	82.5	35.0	80.0	96360-2-4013

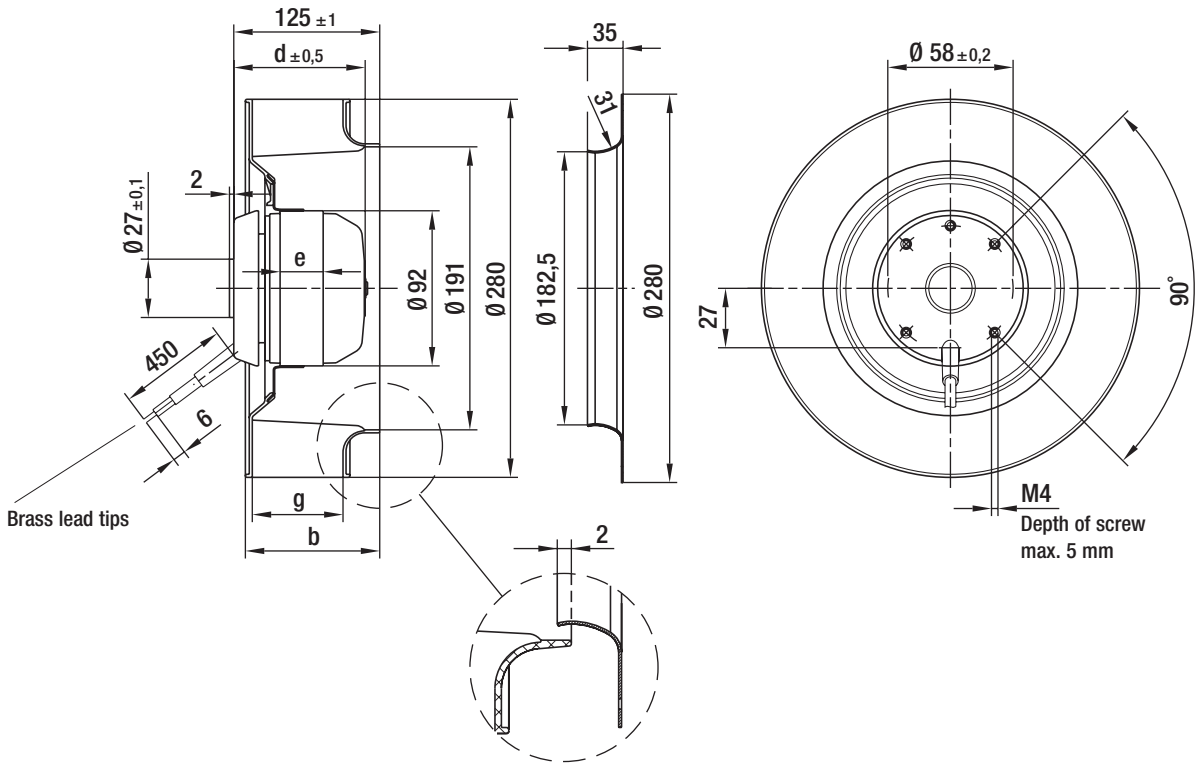

AC centrifugal fans

backward curved, 3-D, Ø 310

- **Material:** Impeller: Sheet aluminium, laser-welded
  Rotor: Coated in black
- **Number of blades:** 6
- **Direction of rotation:** Clockwise, seen on rotor
- **Type of protection:** IP 44
- **Insulation class:** "B"
- **Mounting position:** Shaft horizontal or rotor on bottom; rotor on top on request
- **Condensate discharges:** Rotor-side
- **Mode of operation:** Continuous operation (S1)
- **Bearings:** Maintenance-free ball bearings

Nominal data

Type	Motor	Curve	Nominal voltage VAC	Frequency Hz	Air flow m³/h	Speed/rpm rpm	Power input W	Current draw A	Capacitor µF/VDB	Sound pressure level dB(A)	Perm. amb. temp. °C	Electr. connection p. 596 f.
R4D 310 (1)	M4D 068-EC	A	3~ 230/400	50	1710	1430	85	0.52/0.30	—	62	-25 to +75	C1)/C2)
			3~ 230/400	60	1990	1650	115	0.45/0.26	—	66	-25 to +80	
R4D 310 (1)	M4D 068-EC	B	3~ 230/400	50	2120	1400	110	0.55/0.32	—	60	-25 to +65	C1)/C2)
			3~ 230/400	60	2450	1600	150	0.52/0.30	—	63	-25 to +55	

subject to alterations

(1) 230 VAC Δ / 400 VAC Y

Curves (established with long inlet nozzle)

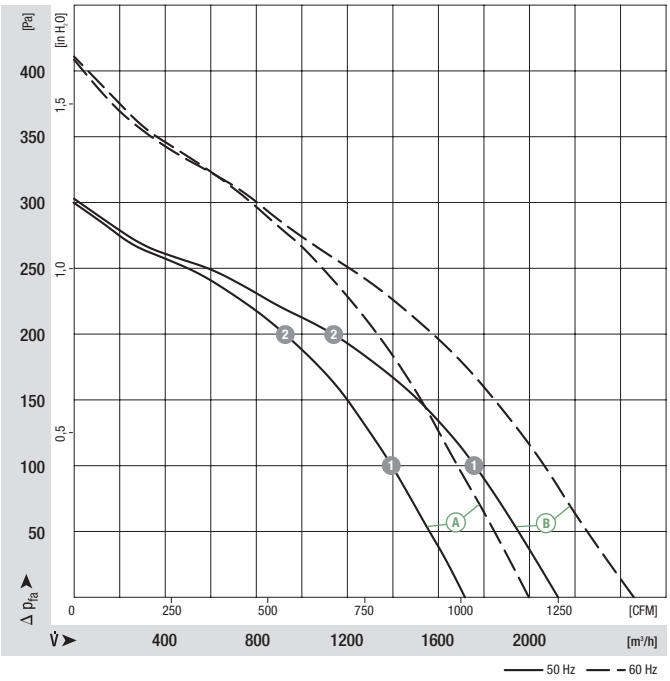

		n [rpm]	P_1 [W]	I [A]
A	1	1400	107	0.65/0.38
A	2	1400	113	0.69/0.40
B	1	1360	136	0.69/0.40
B	2	1350	141	0.71/0.41

ebmpapst

- **Motor protection:** Design with thermal overload protector
- **Cable exit:** Axial
- **Protection class:** I
- **Product conforming to standards:** EN 60335-1, CE
- **Approvals:** CCC

Centrifugal fan	Mass of centrifugal fan kg	Dimensions b	c	g	Inlet nozzle (long)	Inlet nozzle (short)
R4D 310-AR18 -01	3.3	104.0	123.0	70.0	31050-2-4013	31051-2-4013
R4D 310-AS18 -01	3.4	139.0	154.0	101.0	31050-2-4013	31051-2-4013

Inlet nozzle (long)

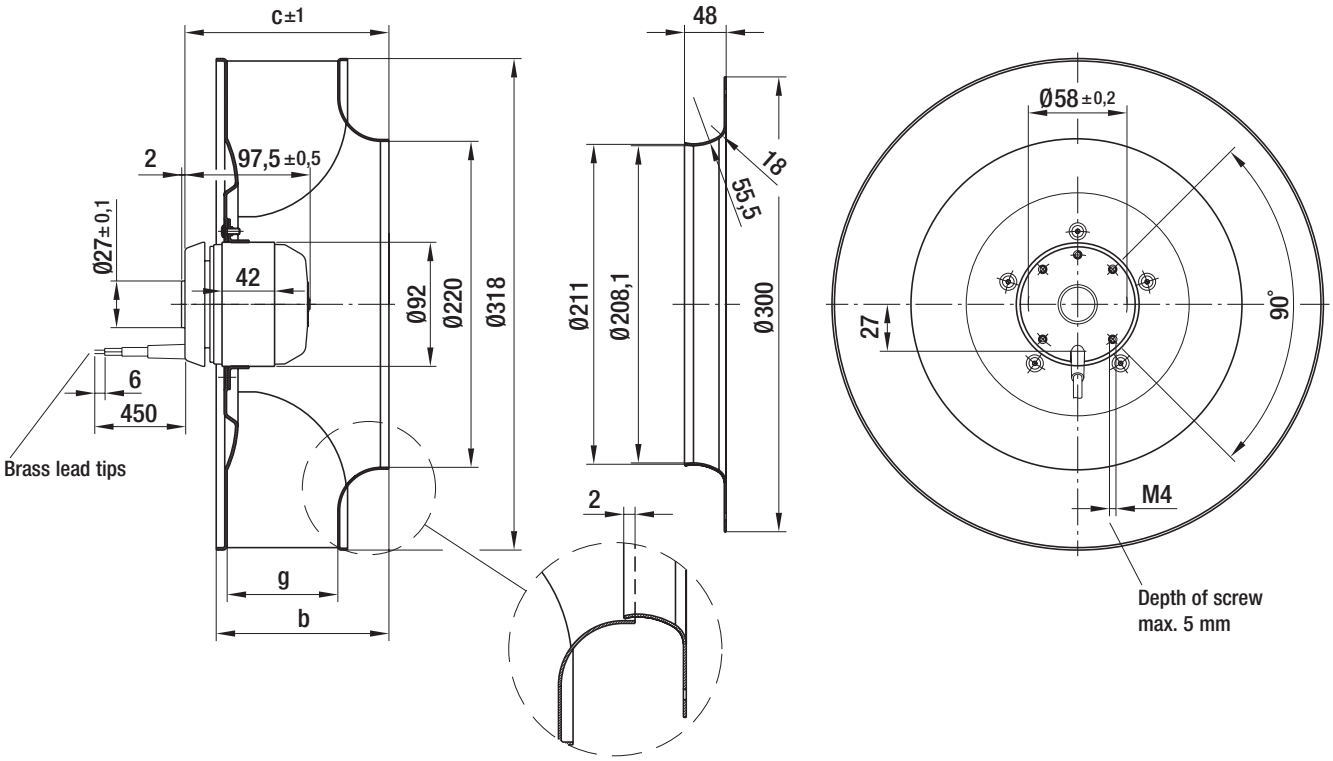

AC centrifugal fans

backward curved, 3-D, Ø 310

- **Material:** Impeller: Sheet aluminium, laser-welded
  Rotor: Coated in black
- **Number of blades:** 6
- **Direction of rotation:** Clockwise, seen on rotor
- **Type of protection:** IP 44
- **Insulation class:** Ⓐ "B", Ⓑ "F"
- **Mounting position:** Shaft horizontal or rotor on bottom; rotor on top on request
- **Condensate discharges:** Rotor-side
- **Mode of operation:** Continuous operation (S1)
- **Bearings:** Maintenance-free ball bearings

Nominal data		Curve	Nominal voltage	Frequency	Air flow	Speed/rpm	Power input	Current draw	Capacitor	Sound pressure level	Perm. amb. temp.	Electr. connection
Type	**Motor**		**VAC**	**Hz**	**m³/h**	**rpm**	**W**	**A**	**µF/VDB**	**dB(A)**	**°C**	p. 596 f.
R4E 310	M4E 068-EC	Ⓐ	1~ 230 1~ 230	50 60	1690 1950	1410 1650	95 125	0.46 0.56	4.0 / 400 4.0 / 400	62 66	-25 to +70 -25 to +65	A1)
R4E 310	M4E 068-EC	Ⓑ	1~ 230 1~ 230	50 60	2130 2380	1370 1530	120 160	0.54 0.71	4.0 / 400 4.0 / 400	59 62	-25 to +85 -25 to +50	A1)

subject to alterations

Curves (established with long inlet nozzle)

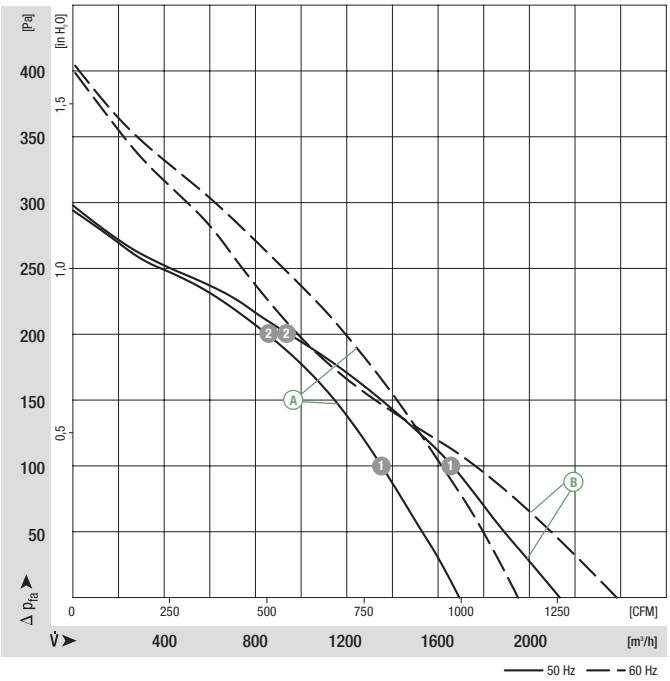

		n [rpm]	P_1 [W]	I [A]
Ⓐ	1	1370	114	0.55
Ⓐ	2	1360	118	0.57
Ⓑ	1	1310	140	0.63
Ⓑ	2	1320	140	0.63

ebmpapst

- **Motor protection:** TOP wired internally
- **Cable exit:** Axial
- **Protection class:** I
- **Product conforming to standards:** EN 60335-1, CE
- **Approvals:** CCC

Centrifugal fan	Mass of centrifugal fan kg	Dimensions b	c	g	Inlet nozzle (long)	Inlet nozzle (short)
R4E 310-AR06 -01	3.3	104.0	123.0	70.0	31050-2-4013	31051-2-4013
R4E 310-AS06 -01	3.4	139.0	154.0	101.0	31050-2-4013	31051-2-4013

Inlet nozzle (long)

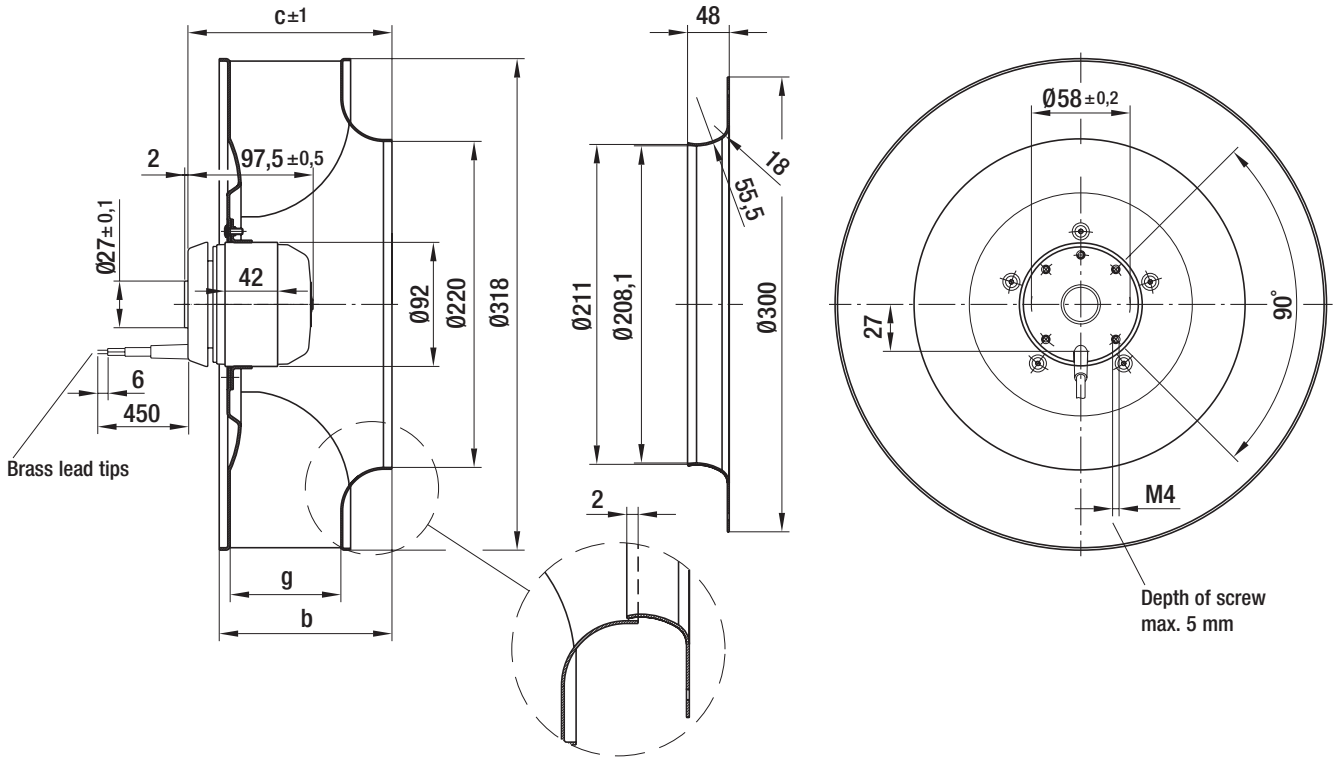

AC centrifugal fans

backward curved, 3-D, Ø 310

- **Material:** Impeller: Sheet aluminium, laser-welded
  Rotor: Coated in black
- **Number of blades:** 6
- **Direction of rotation:** Clockwise, seen on rotor
- **Type of protection:** IP 44
- **Insulation class:** "B"
- **Mounting position:** Shaft horizontal or rotor on bottom; rotor on top on request
- **Condensate discharges:** Rotor-side
- **Mode of operation:** Continuous operation (S1)
- **Bearings:** Maintenance-free ball bearings

Nominal data		Curve	Nominal voltage	Frequency	Air flow	Speed/rpm	Power input	Current draw	Capacitor	Sound pressure level	Perm. amb. temp.	Electr. connection
Type	**Motor**		**VAC**	**Hz**	**m³/h**	**rpm**	**W**	**A**	**µF/VDB**	**dB(A)**	**°C**	p. 596 f.
R6E 310	M6E 068-EC	A	1~ 230 1~ 230	50 60	1110 1320	950 1120	45 55	0.21 0.25	1.5 / 450 1.5 / 450	51 55	-25 to +75 -25 to +80	A1)
R6E 310	M6E 068-EC	B	1~ 230 1~ 230	50 60	1400 1640	920 1070	48 60	0.22 0.27	1.5 / 450 1.5 / 450	50 53	-25 to +75 -25 to +75	A1)

subject to alterations

Curves (established with long inlet nozzle)

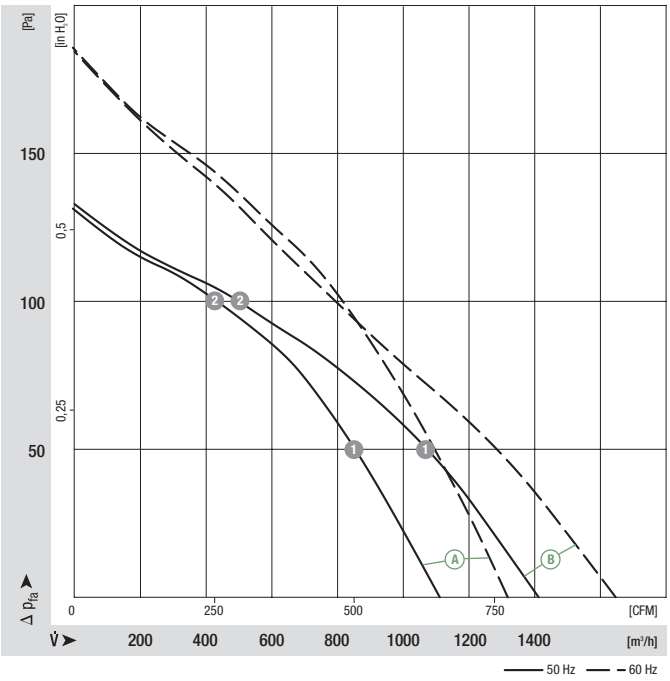

		n [rpm]	P_1 [W]	I [A]
A	1	950	46	0.21
A	2	925	50	0.23
B	1	885	53	0.24
B	2	900	51	0.23

ebmpapst

- **Motor protection:** TOP wired internally
- **Cable exit:** Axial
- **Protection class:** I
- **Product conforming to standards:** EN 60335-1, CE
- **Approvals:** CCC

Centrifugal fan	Mass of centrifugal fan kg	Dimensions b	c	g	Inlet nozzle (long)	Inlet nozzle (short)
R6E 310-AI04 -01	3.3	104.0	123.0	70.0	31050-2-4013	31051-2-4013
R6E 310-AJ04 -01	3.4	139.0	154.0	101.0	31050-2-4013	31051-2-4013

Inlet nozzle (long)

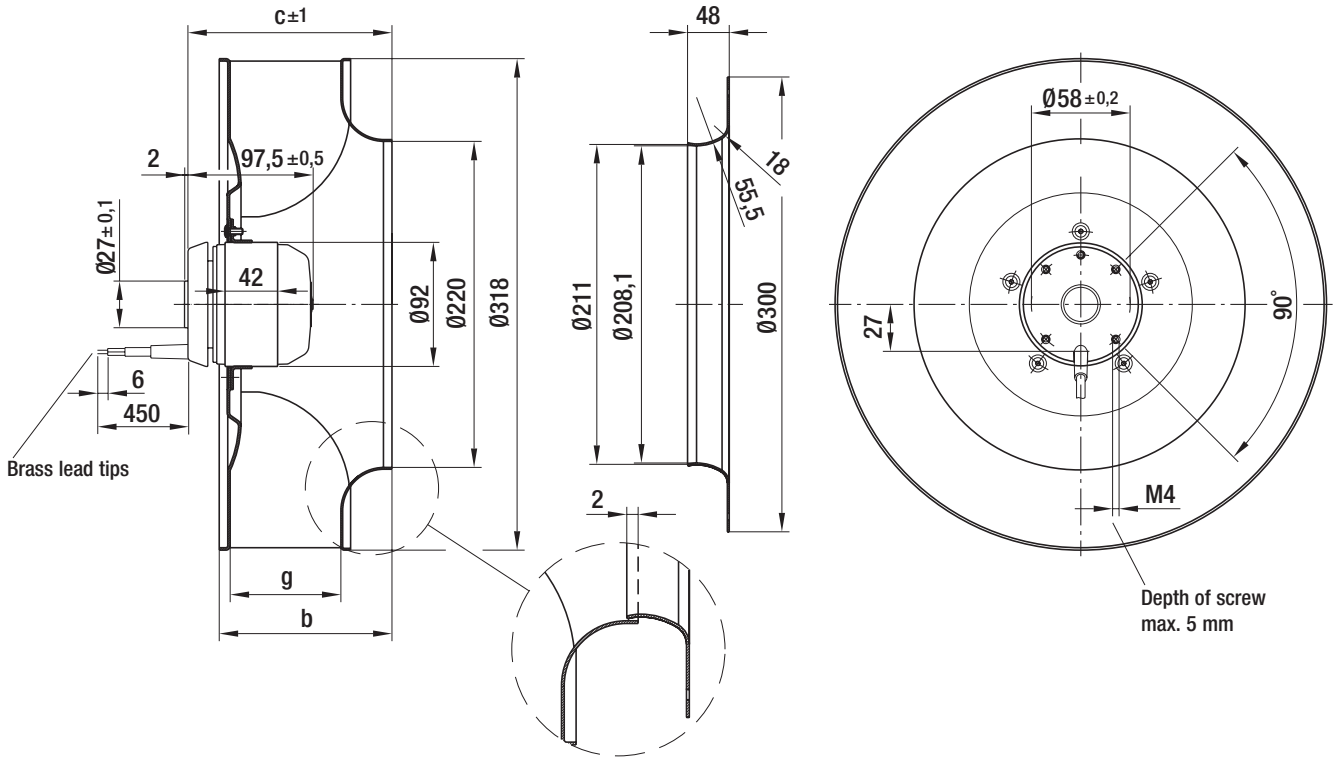

AC centrifugal fans

backward curved, 3-D, Ø 355

- **Material:** Impeller: Sheet aluminium, laser-welded
  Rotor: Coated in black
- **Number of blades:** 6
- **Direction of rotation:** Clockwise, seen on rotor
- **Type of protection:** IP 44
- **Insulation class:** "F"
- **Mounting position:** Shaft horizontal or rotor on bottom; rotor on top on request
- **Condensate discharges:** Rotor-side
- **Mode of operation:** Continuous operation (S1)
- **Bearings:** Maintenance-free ball bearings

Nominal data		Curve	Nominal voltage	Frequency	Air flow	Speed/rpm	Power input	Current draw	Capacitor	Sound pressure level	Perm. amb. temp.	Electr. connection
Type	**Motor**		**VAC**	**Hz**	**m³/h**	**rpm**	**W**	**A**	**µF/VDB**	**dB(A)**	**°C**	p. 596 f.
R4D 355	M4D 074-EI	A	3~ 400 Y 3~ 400 Y	50 60	2580 2930	1400 1600	170 235	0.52 0.50	— —	65 69	-25 to +70 -25 to +65	D2)
R4E 355	M4E 074-EI	B	1~ 230 1~ 230	50 60	2580 2940	1400 1600	180 260	0.80 1.14	6.0 / 450 6.0 / 450	66 69	-25 to +60 -25 to +35	A1)
R4E 355	M4E 074-GA	C	1~ 230	50	3160	1420	245	1.12	8.0 / 400	66	-25 to +50	A1)

subject to alterations

Curves (established with long inlet nozzle)

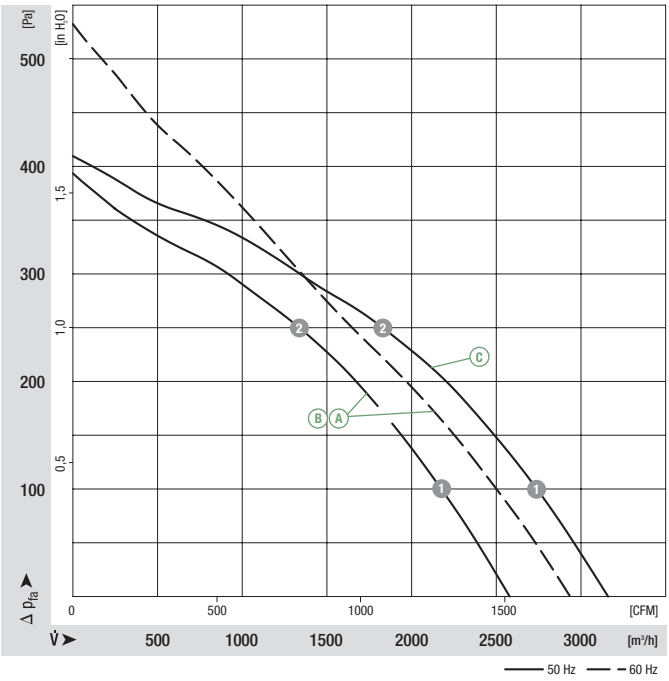

		n [rpm]	P_1 [W]	I [A]
A	1	1375	205	0.63
A	2	1360	227	0.70
B	1	1350	209	0.93
B	2	1330	229	1.02
C	1	1395	273	1.25
C	2	1375	295	1.35

ebmpapst

- **Motor protection:** Ⓐ design with thermal overload protector, Ⓑ Ⓒ TOP wired internally
- **Cable exit:** Variable
- **Protection class:** I
- **Product conforming to standards:** EN 60335-1, CE
- **Approvals:** CCC

Centrifugal fan	Mass of centrifugal fan kg	Dimensions b	c	d	e	g	Inlet nozzle (long)	Inlet nozzle (short)
R4D 355-AH11 -05	4.7	146.5	167.0	117.0	48.0	96.0	35560-2-4013	35561-2-4013
R4E 355-AK05 -05	4.7	146.5	167.0	117.0	48.0	96.0	35560-2-4013	35561-2-4013
R4E 355-AL02 -05	5.3	171.0	190.0	129.0	60.0	120.5	35560-2-4013	35561-2-4013

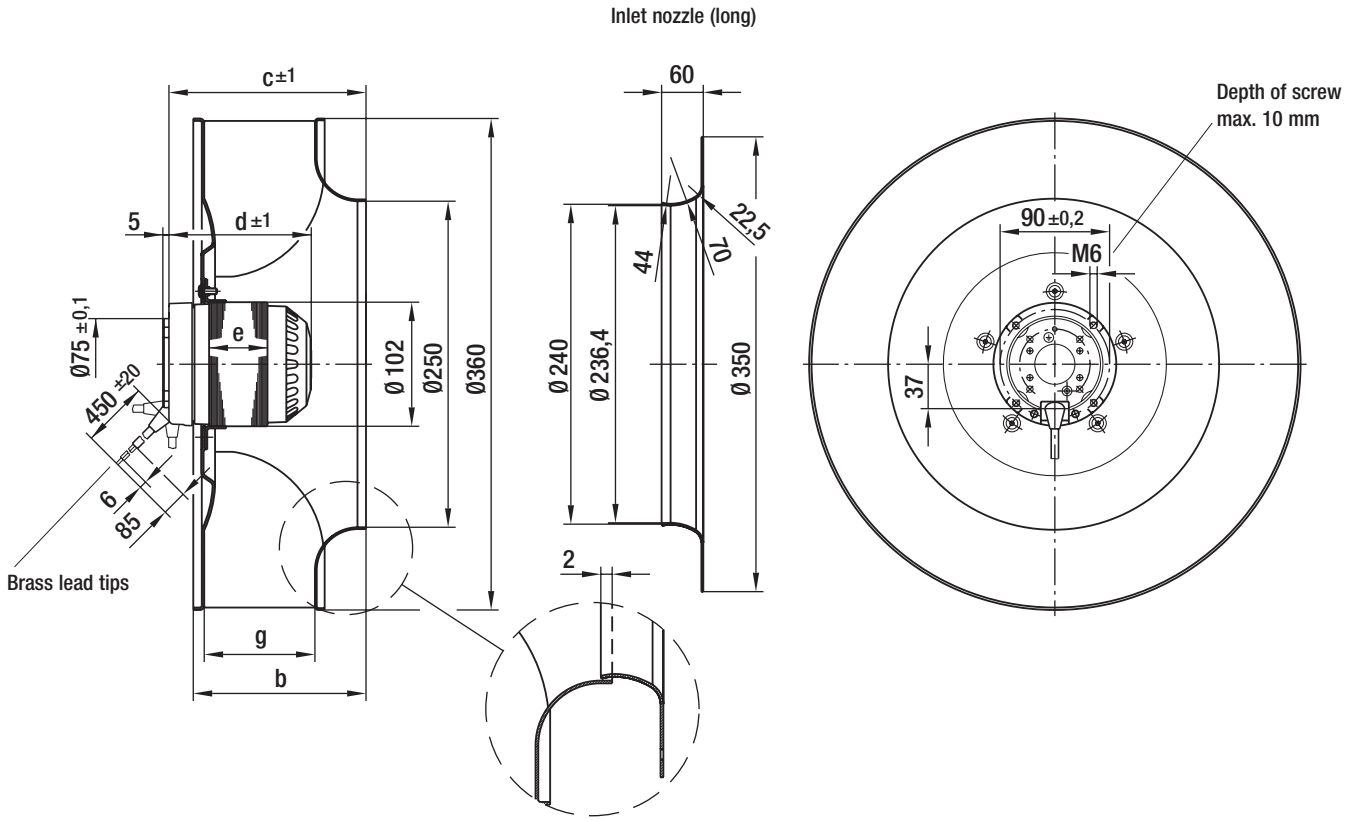

AC centrifugal fans

backward curved, 3-D, Ø 355

- **Material:** Impeller: Sheet aluminium, laser-welded
  Rotor: Coated in black
- **Number of blades:** 6
- **Direction of rotation:** Clockwise, seen on rotor
- **Type of protection:** IP 44
- **Insulation class:** "F"
- **Mounting position:** Shaft horizontal or rotor on bottom; rotor on top on request
- **Condensate discharges:** Rotor-side
- **Mode of operation:** Continuous operation (S1)
- **Bearings:** Maintenance-free ball bearings

Nominal data		Curve	Nominal voltage	Frequency	Air flow	Speed/rpm	Power input	Current draw	Capacitor	Sound pressure level	Perm. amb. temp.	Electr. connection
Type	**Motor**		**VAC**	**Hz**	**m³/h**	**rpm**	**W**	**A**	**µF/VDB**	**dB(A)**	**°C**	p. 596 f.
R6E 355	M6E 074-DF	A	1~ 230 1~ 230	50 60	1700 1890	910 1000	65 85	0.29 0.37	2.0 / 400 2.0 / 400	54 57	-25 to +90 -25 to +75	A1)
R6E 355	M6E 074-DF	B	1~ 230 1~ 230	50 60	1930 1940	870 890	70 90	0.31 0.40	2.0 / 400 2.0 / 400	52 53	-25 to +85 -25 to +60	A1)

subject to alterations

Curves (established with long inlet nozzle)

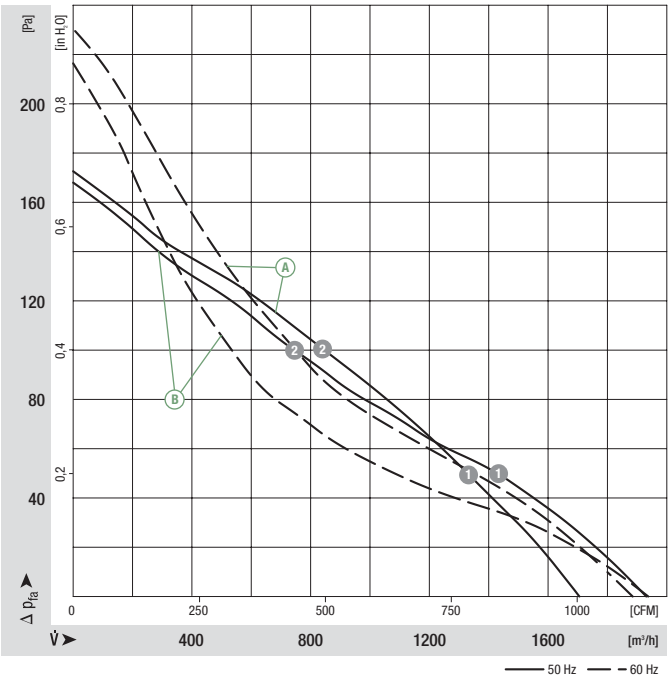

	n [rpm]	P_1 [W]	I [A]
A 1	860	71	0.32
A 2	850	73	0.33
B 1	785	80	0.35
B 2	805	78	0.34

ebmpapst

- **Motor protection:** TOP wired internally
- **Cable exit:** Variable
- **Protection class:** I
- **Product conforming to standards:** EN 60335-1, CE
- **Approvals:** GOST

Centrifugal fan	Mass of centrifugal fan kg	Dimensions b	c	g	Inlet nozzle (long)	Inlet nozzle (short)
R6E 355-AD16 -05	3.5	146.5	167.0	96.0	35560-2-4013	35561-2-4013
R6E 355-AE16 -05	4.1	171.0	190.0	120.5	35560-2-4013	35561-2-4013

Inlet nozzle (long)

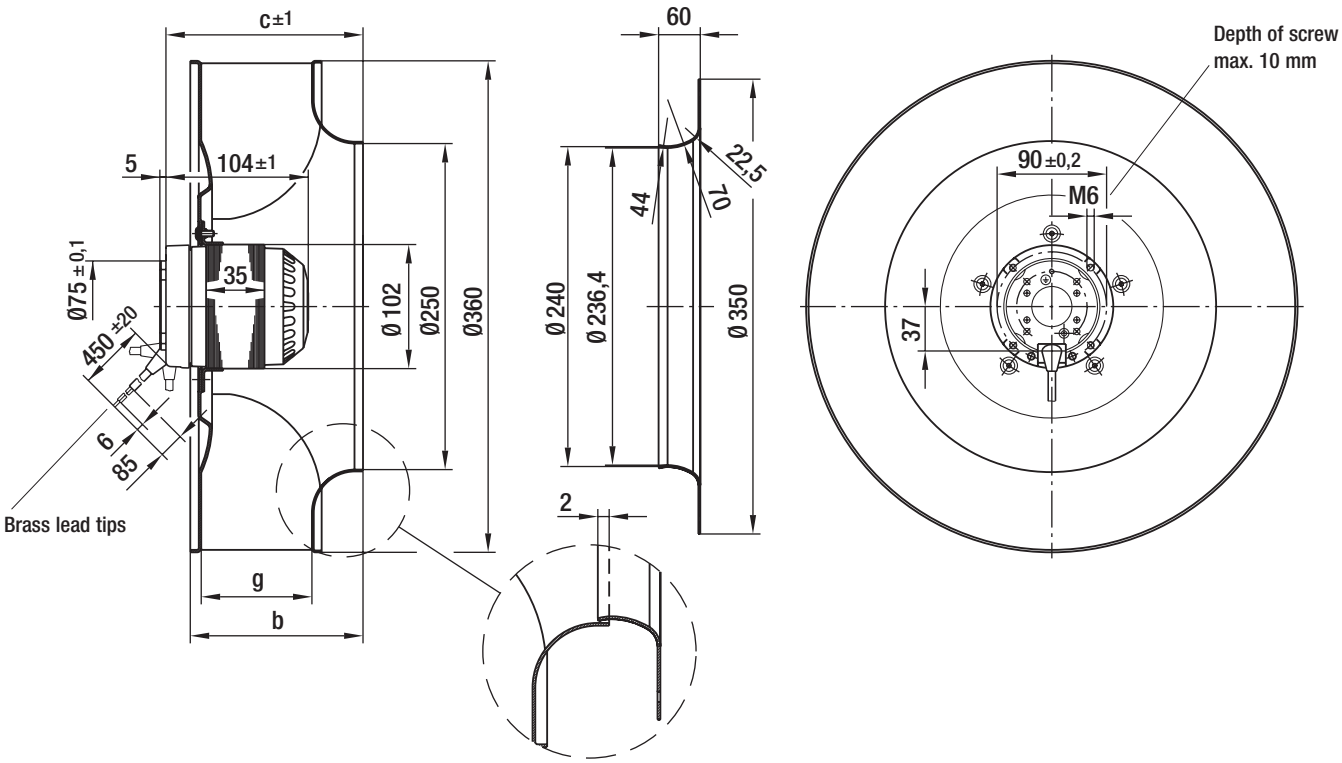

AC centrifugal fans

backward curved, 3-D, Ø 400

- **Material:** Impeller: Sheet aluminium, joined by tabs
  Rotor: Coated in black
- **Number of blades:** 6
- **Direction of rotation:** Clockwise, seen on rotor
- **Type of protection:** IP 44
- **Insulation class:** Ⓐ "F", Ⓑ "B"
- **Mounting position:** Ⓐ any, Ⓑ shaft horizontal or rotor on bottom; rotor on top on request
- **Condensate discharge holes:** Ⓐ none, Ⓑ rotor-side
- **Mode of operation:** Continuous operation (S1)
- **Bearings:** Maintenance-free ball bearings

Nominal data

Type	Motor	Curve	Nominal voltage VAC	Frequency Hz	Air flow m³/h	Speed/rpm rpm	Power input W	Current draw A	Capacitor µF/VDB	Sound pressure level dB(A)	Perm. amb. temp. °C	Electr. connection p. 596 f.
R4E 400	M4E 074-EI	Ⓐ	1~ 230	50	3150	1300	270	1.20	8.0 / 400	68	-25 to +45	A1)
R6E 400	M6E 074-EI	Ⓑ	1~ 230 1~ 230	50 60	2225 2455	910 1000	117 160	0.52 0.70	3.0 / 450 3.0 / 450	62 64	-25 to +55 -25 to +40	A1)

subject to alterations

Curves

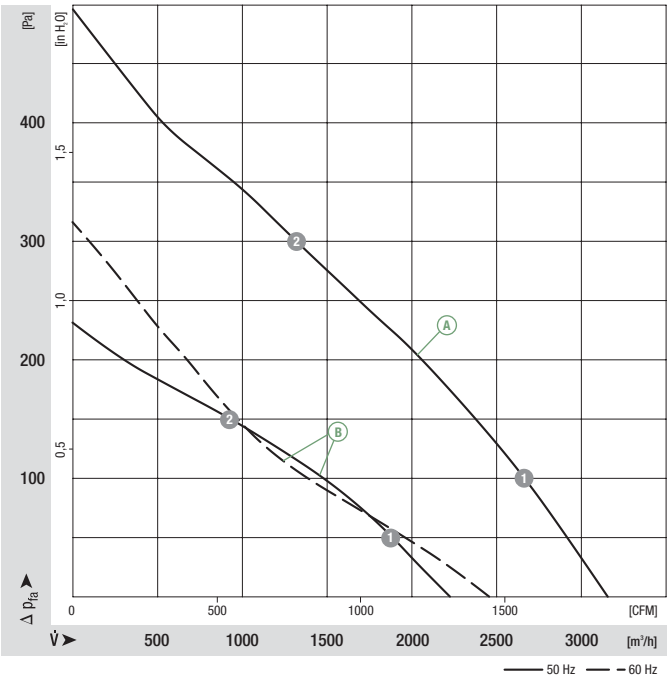

	n [rpm]	P_1 [W]	I [A]
Ⓐ ❶	1240	292	1.30
Ⓐ ❷	1250	287	1.27
Ⓑ ❶	880	125	0.56
Ⓑ ❷	880	125	0.56

ebmpapst

- **Motor protection:** TOP wired internally
- **Cable exit:** Variable
- **Protection class:** I
- **Product conforming to standards:** EN 60335-1, CE
- **Approvals:** CCC, ⓑ also GOST

Centrifugal fan	Mass of centrifugal fan kg	Inlet nozzle (long)
R4E 400-AB23 -05	5.2	54476-2-4013
R6E 400-AA04 -05	5.2	54476-2-4013

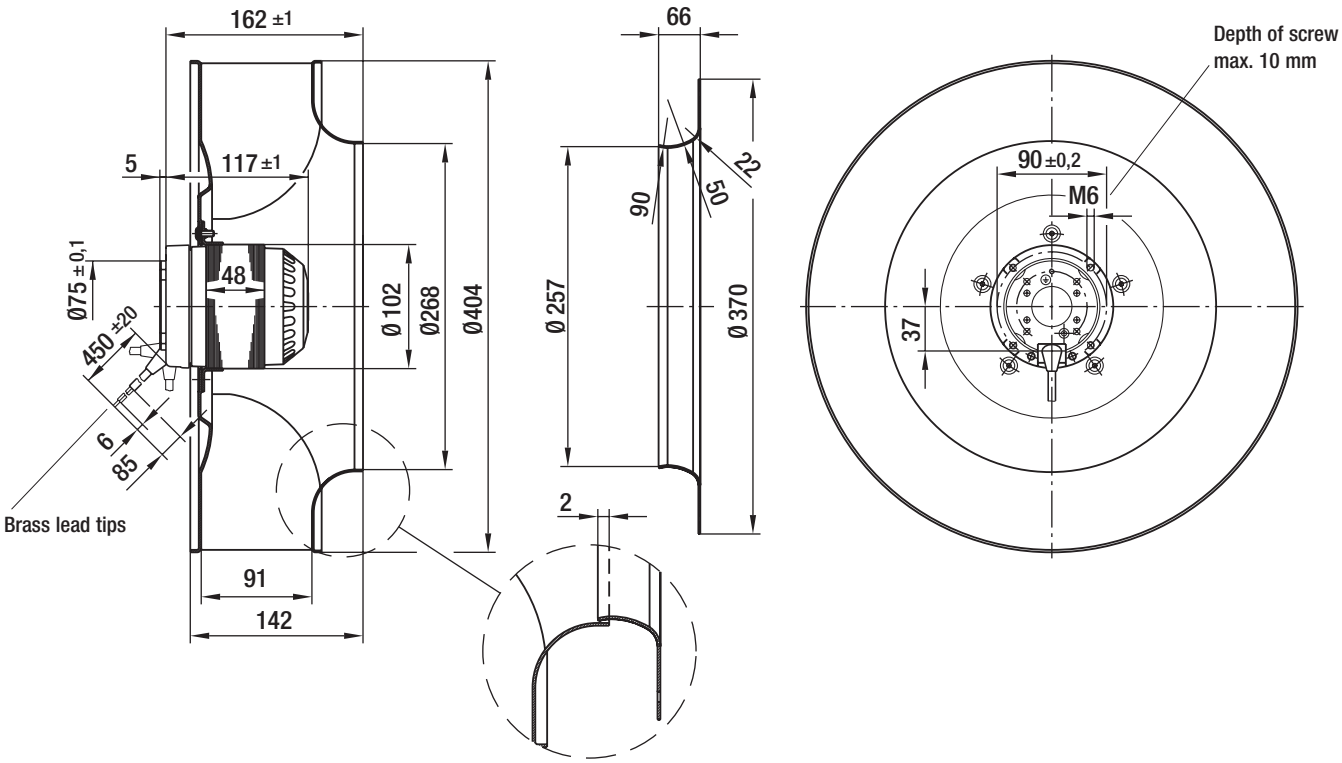

AC centrifugal fans

backward curved, 3-D, Ø 400

- **Material:** Impeller: Sheet aluminium, joined by tabs
  Rotor: Coated in black
- **Number of blades:** 6
- **Direction of rotation:** Clockwise, seen on rotor
- **Type of protection:** IP 54 (acc. to EN 60529)
- **Insulation class:** "F"
- **Mounting position:** Any
- **Condensate discharges:** None
- **Mode of operation:** Continuous operation (S1)
- **Bearings:** Maintenance-free ball bearings

Nominal data

Type	Motor	Curve	Nominal voltage VAC	Frequency Hz	Speed/rpm (1) rpm	Max. power input (1) W	Max. current draw (1) A	Capacitor µF/VDB	Perm. amb. temp. °C	Electr. connection p. 596 f.
R4E 400	M4E 094-FA	A	1~ 230 1~ 230	50 60	1355 1480	375 540	1.75 2.40	8.0 / 400 8.0 / 400	-40 to +60 -40 to +50	A2a)
R4E 400	M4E 094-HA	B	1~ 230 1~ 230	50 60	1370 1460	480 700	2.40 3.15	10.0 / 450 10.0 / 450	-40 to +80 -40 to +55	A2a)

subject to alterations

(1) Nominal data in operating point with maximum load

Curves

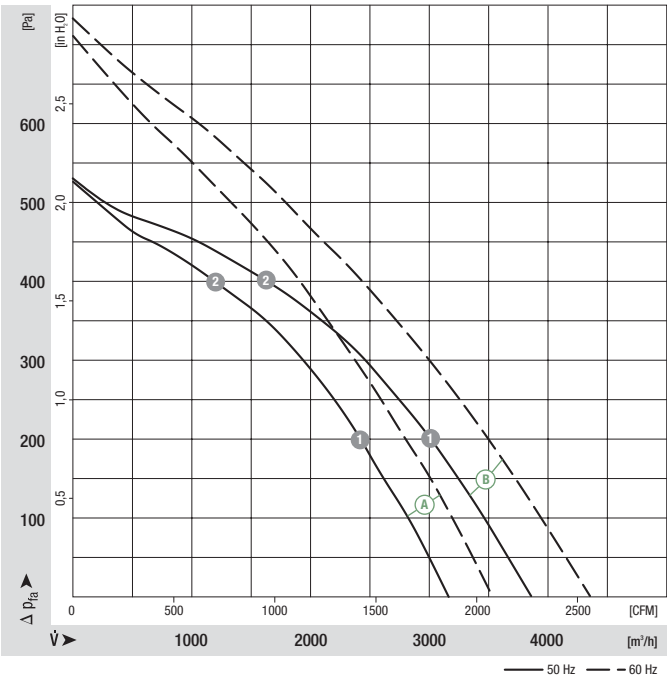

		n [rpm]	P_1 [W]	I [A]	Lp_A [dB(A)]
A	1	1350	370	1.75	64
A	2	1380	331	1.58	65
B	1	1370	469	2.37	66
B	2	1390	430	2.17	68

ebmpapst

- **Motor protection:** Design with thermal overload protector
- **Cable exit:** Diagonal
- **Protection class:** I (acc. to EN 61800-5-1)
- **Product conforming to standard:** CE

Centrifugal fan	Mass of centrifugal fan kg	Dimensions b	c	d	e	g	Inlet nozzle (long)
R4E 400-AR05 -06	7.1	141.0	172.0	128.0	50.0	90.0	54476-2-4013
R4E 400-AP17 -06	8.8	164.0	193.0	148.0	70.0	113.0	54476-2-4013

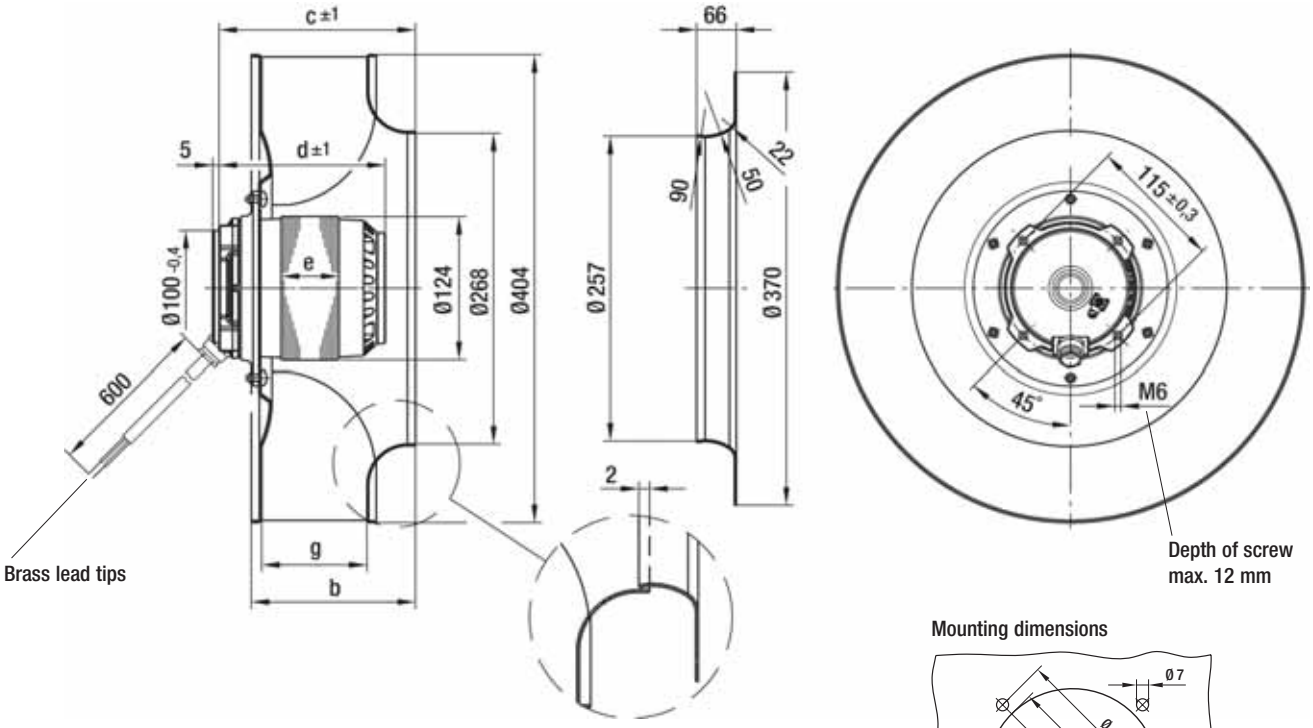

Mounting dimensions

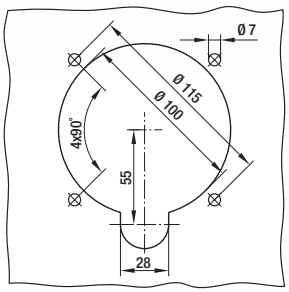

Inlet nozzle p. 550
Guard grille p. 553
Capacitor p. 560 f.
Electr. connections p. 596 f.

AC centrifugal fans

backward curved, Ø 400

- **Material:** Impeller: Sheet aluminium, riveted
  Rotor: Coated in black
- **Number of blades:** 6
- **Direction of rotation:** Clockwise, seen on rotor
- **Type of protection:** IP 54 (acc. to EN 60529)
- **Insulation class:** "F"
- **Mounting position:** Any
- **Condensate discharges:** None
- **Mode of operation:** Continuous operation (S1)
- **Bearings:** Maintenance-free ball bearings

Nominal data

Type	Motor	Curve	Nominal voltage VAC	Frequency Hz	Speed/rpm (1) rpm	Max. power input (1) W	Max. current draw (1) A	Capacitor µF/VDB	Perm. amb. temp. °C	Electr. connection p. 596 f.
R4D 400	M4D 094-HA	A	3~ 400 Δ	50	1415	515	1.41	—	-40 to +60	F1a)/F2a)
		B	3~ 400 Y	50	1235	385	0.70	—	-40 to +80	
		C	3~ 400 Δ	60	1610	750	1.44	—	-40 to +60	
		D	3~ 400 Y	60	1220	515	0.93	—	-40 to +40	

subject to alterations

(1) Nominal data in operating point with maximum load

Curves

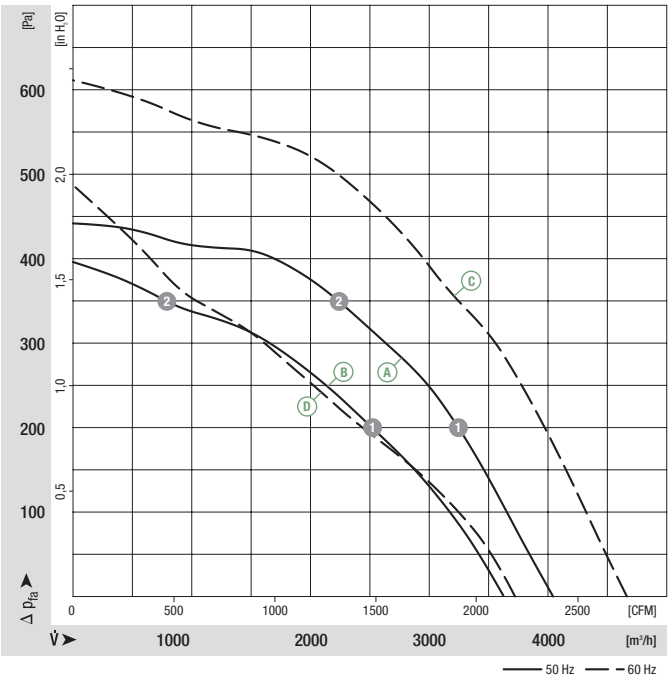

		n [rpm]	P_1 [W]	I [A]	Lp_A [dB(A)]
A	1	1415	490	1.40	63
A	2	1415	500	1.41	65
B	1	1240	380	0.67	70
B	2	1320	281	0.52	66

ebmpapst

- **Motor protection:** Design with thermal overload protector
- **Cable exit:** Diagonal
- **Protection class:** I (acc. to EN 61800-5-1)
- **Product conforming to standard:** CE

Centrifugal fan	Mass of centrifugal fan kg	Inlet nozzle (long)
R4D 400-AD22 -06	8.7	54476-2-4013

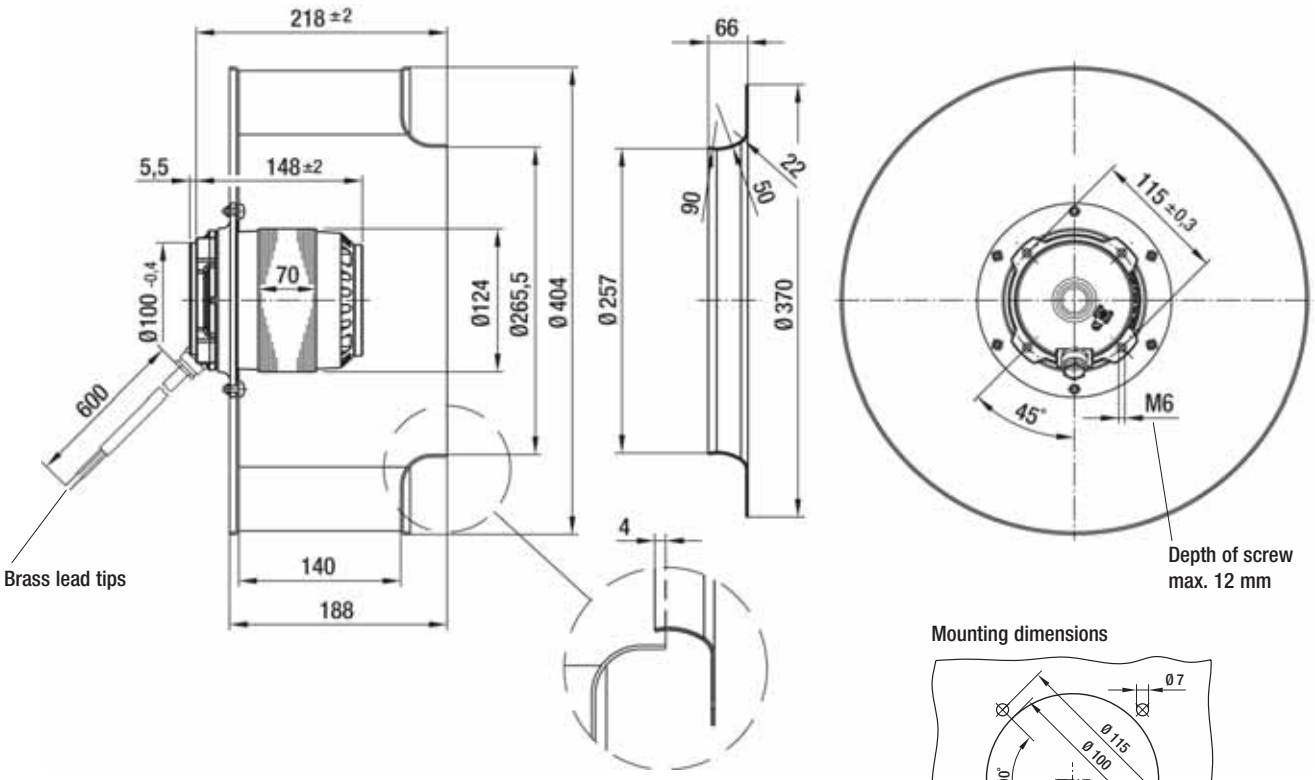

Mounting dimensions

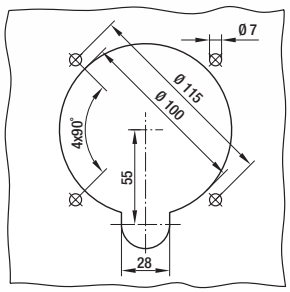

AC centrifugal fans

backward curved, Ø 400

- **Material:** Impeller: Sheet aluminium, riveted
  Rotor: Coated in black
- **Number of blades:** 6
- **Direction of rotation:** Clockwise, seen on rotor
- **Type of protection:** IP 54 (acc. to EN 60529)
- **Insulation class:** "F"
- **Mounting position:** Any
- **Condensate discharges:** None
- **Mode of operation:** Continuous operation (S1)
- **Bearings:** Maintenance-free ball bearings

Nominal data

Type	Motor	Curve	Nominal voltage VAC	Frequency Hz	Speed/rpm (1) rpm	Max. power input (1) W	Max. current draw (1) A	Capacitor µF/VDB	Perm. amb. temp. °C	Electr. connection p. 596 f.
R4E 400	M4E 094-HA	A	1~ 230	50	1370	480	2.40	10.0 / 400	-40 to +70	A2a)
			1~ 230	60	1500	695	3.18	10.0 / 450	-40 to +55	
R6E 400	M6E 094-FA	B	1~ 230	50	895	155	0.68	5.0 / 450	-40 to +95	A2a)
			1~ 230	60	990	220	0.97	5.0 / 450	-40 to +85	

subject to alterations

(1) Nominal data in operating point with maximum load

Curves

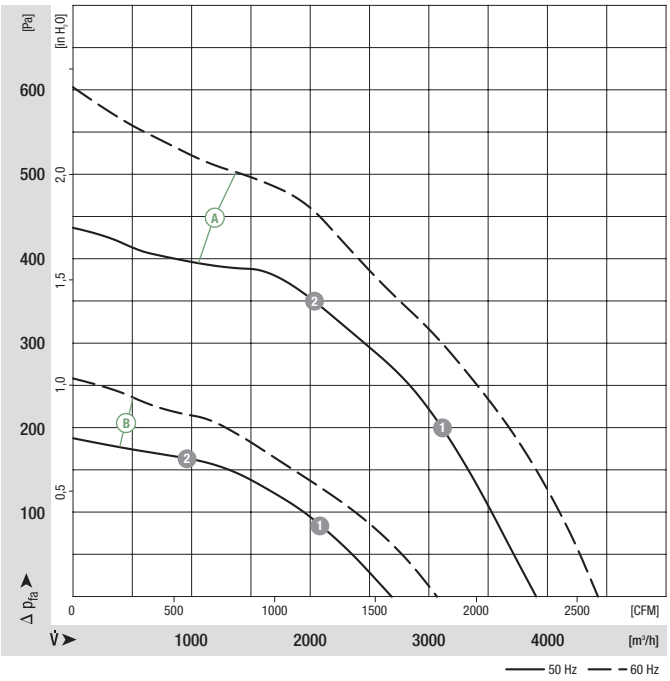

	n [rpm]	P_1 [W]	I [A]	Lp_A [dB(A)]
A 1	1380	464	2.36	68
A 2	1380	462	2.36	65
B 1	900	149	0.65	56
B 2	910	143	0.65	54

ebmpapst

- **Motor protection:** Design with thermal overload protector
- **Cable exit:** Diagonal
- **Protection class:** I (acc. to EN 61800-5-1)
- **Product conforming to standard:** CE

Centrifugal fan	Mass of centrifugal fan kg	Dimensions d	Dimensions e	Inlet nozzle (long)
R4E 400-AN09 -06	8.7	148.0	70.0	54476-2-4013
R6E 400-AK06 -06	8.7	128.0	50.0	54476-2-4013

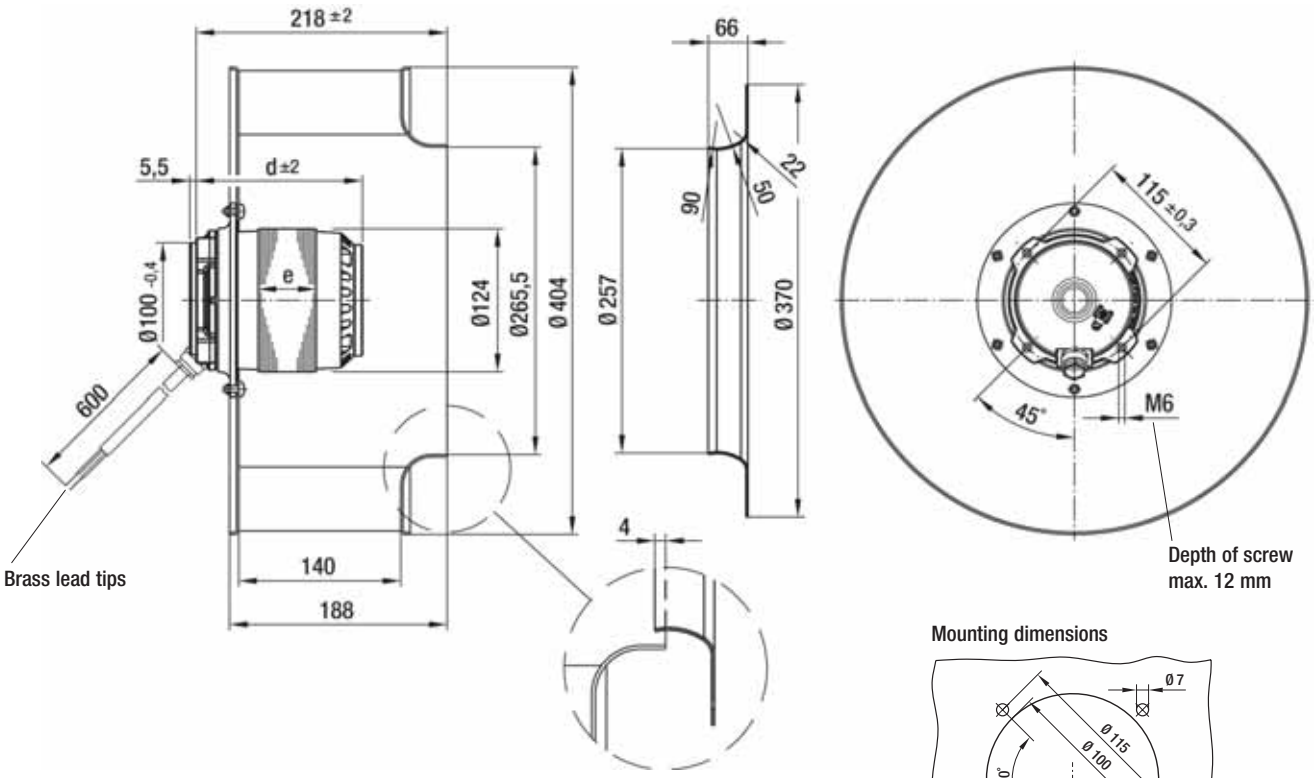

Mounting dimensions

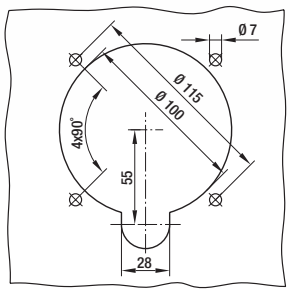

AC centrifugal fans

backward curved, 3-D, Ø 450

- **Material:** Impeller: Sheet aluminium, welded
  Rotor: Cast in aluminium
- **Number of blades:** 6
- **Direction of rotation:** Clockwise, seen on rotor
- **Type of protection:** IP 54 (acc. to EN 60529)
- **Insulation class:** "F"
- **Mounting position:** Any
- **Condensate discharge holes:** On rotor and stator sides
- **Mode of operation:** Continuous operation (S1)
- **Bearings:** Maintenance-free ball bearings

Nominal data

Type	Motor	Curve	Nominal voltage VAC	Frequency Hz	Speed/rpm (1) rpm	Max. power input (1) kW	Max. current draw (1) A	Capacitor µF/VDB	Perm. amb. temp. °C	Electr. connection p. 596 f.
R4D 450 (2)	M4D 110-GF	A	3~ 230/400	50	1350	0.74	2.60/1.50	—	-40 to +80	D1)/D2)

subject to alterations

(1) Nominal data in operating point with maximum load (2) 230 VAC Δ / 400 VAC Y

Curves

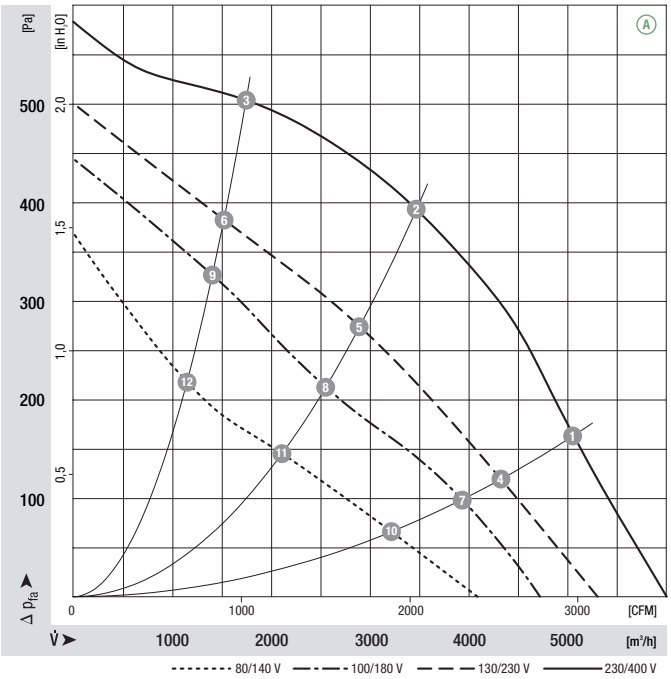

	n [rpm]	P_1 [kW]	I [A]	Lw_A [dB(A)]
A 1	1370	0.65	2.35/1.35	75
A 2	1350	0.73	2.50/1.45	70
A 3	1380	0.61	2.25/1.30	76
A 4	1155	0.47	2.40/1.40	70
A 5	1115	0.51	2.60/1.50	65
A 6	1180	0.45	2.25/1.30	72
A 7	1055	0.37	2.45/1.40	68
A 8	955	0.38	2.60/1.50	61
A 9	1100	0.32	2.25/1.30	70
A 10	830	0.26	2.25/1.30	61
A 11	780	0.27	2.25/1.30	56
A 12	850	0.25	2.15/1.25	63

ebmpapst

- **Motor protection:** Design with thermal overload protector
- **Cable exit:** Diagonal
- **Protection class:** I (acc. to EN 61800-5-1)
- **Product conforming to standard:** CE
- **Approvals:** VDE (acc. to EN 60034)

Centrifugal fan	Mass of centrifugal fan kg	Inlet nozzle (long)
R4D 450-AK01 -01	12.5	63045-2-4013

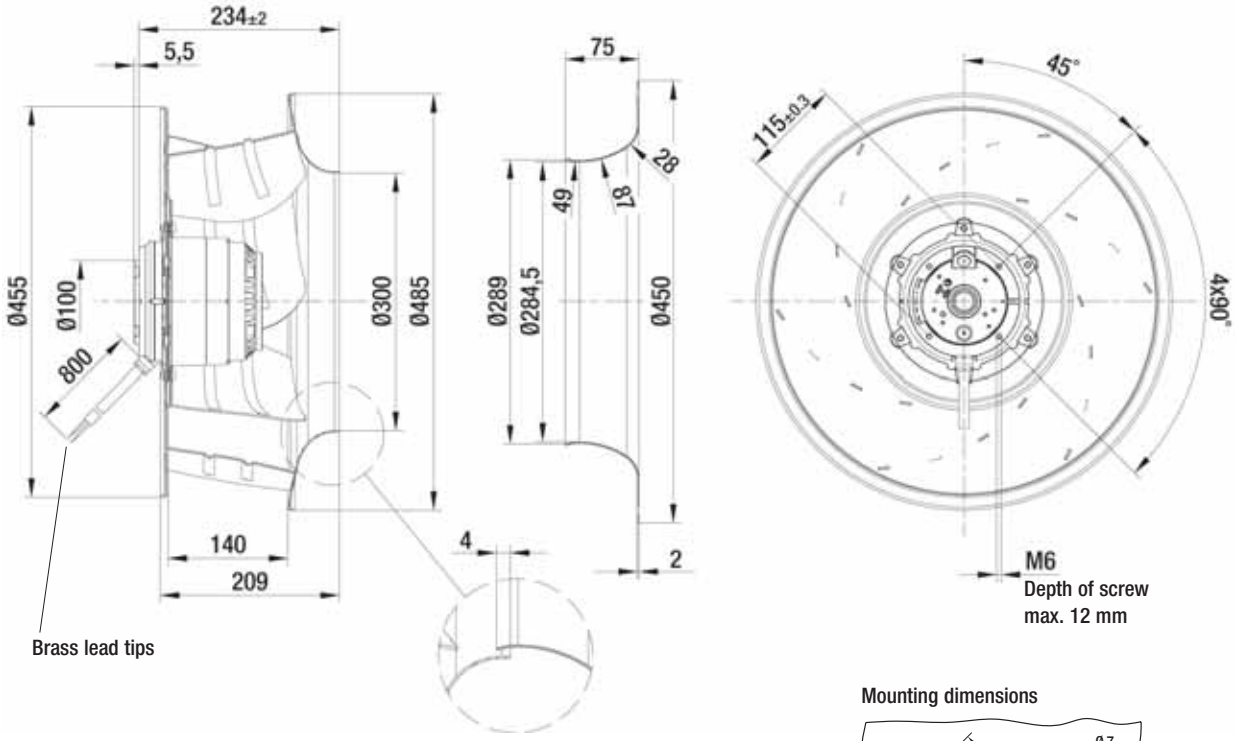

Mounting dimensions

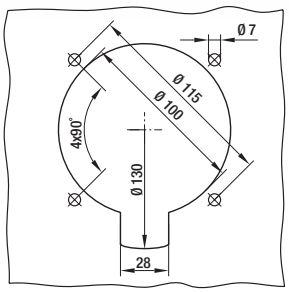

Inlet nozzle p. 550
Guard grille p. 553
Electr. connections p. 596 f.

AC centrifugal fans

backward curved, 3-D, Ø 450

- **Material:** Impeller: Sheet aluminium, welded
  Rotor: Cast in aluminium
- **Number of blades:** 6
- **Direction of rotation:** Clockwise, seen on rotor
- **Type of protection:** IP 54 (acc. to EN 60529)
- **Insulation class:** "F"
- **Mounting position:** Any
- **Condensate discharge holes:** On rotor and stator sides
- **Mode of operation:** Continuous operation (S1)
- **Bearings:** Maintenance-free ball bearings

Nominal data

Type	Motor	Curve	Nominal voltage VAC	Frequency Hz	Speed/rpm (1) rpm	Max. power input (1) kW	Max. current draw (1) A	Capacitor µF/VDB	Perm. amb. temp. °C	Electr. connection p. 596 f.
R4E 450	M4E 110-GF	A	1~ 230	50	1250	0.68	3.00	14.0 / 400	-40 to +70	A2a)

subject to alterations

(1) Nominal data in operating point with maximum load

Curves

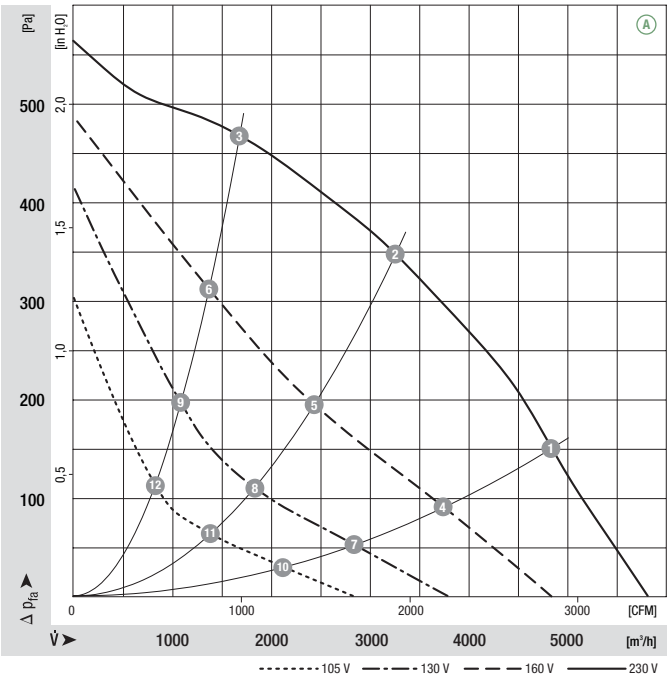

	n [rpm]	P_1 [kW]	I [A]	Lw_A [dB(A)]
A 1	1300	0.65	2.80	74
A 2	1265	0.68	3.00	69
A 3	1320	0.62	2.68	75
A 4	970	0.43	2.80	65
A 5	900	0.43	2.90	60
A 6	1040	0.41	2.71	69
A 7	720	0.29	2.40	61
A 8	670	0.29	2.49	53
A 9	790	0.29	2.41	62
A 10	545	0.19	2.00	50
A 11	510	0.19	2.00	47
A 12	580	0.19	2.00	54

ebmpapst

- **Motor protection:** Design with thermal overload protector
- **Cable exit:** Diagonal
- **Protection class:** I (acc. to EN 61800-5-1)
- **Product conforming to standard:** CE
- **Approvals:** VDE (acc. to EN 60034)

Centrifugal fan	Mass of centrifugal fan kg	Inlet nozzle (long)
R4E 450-AK01 -01	12.5	63045-2-4013

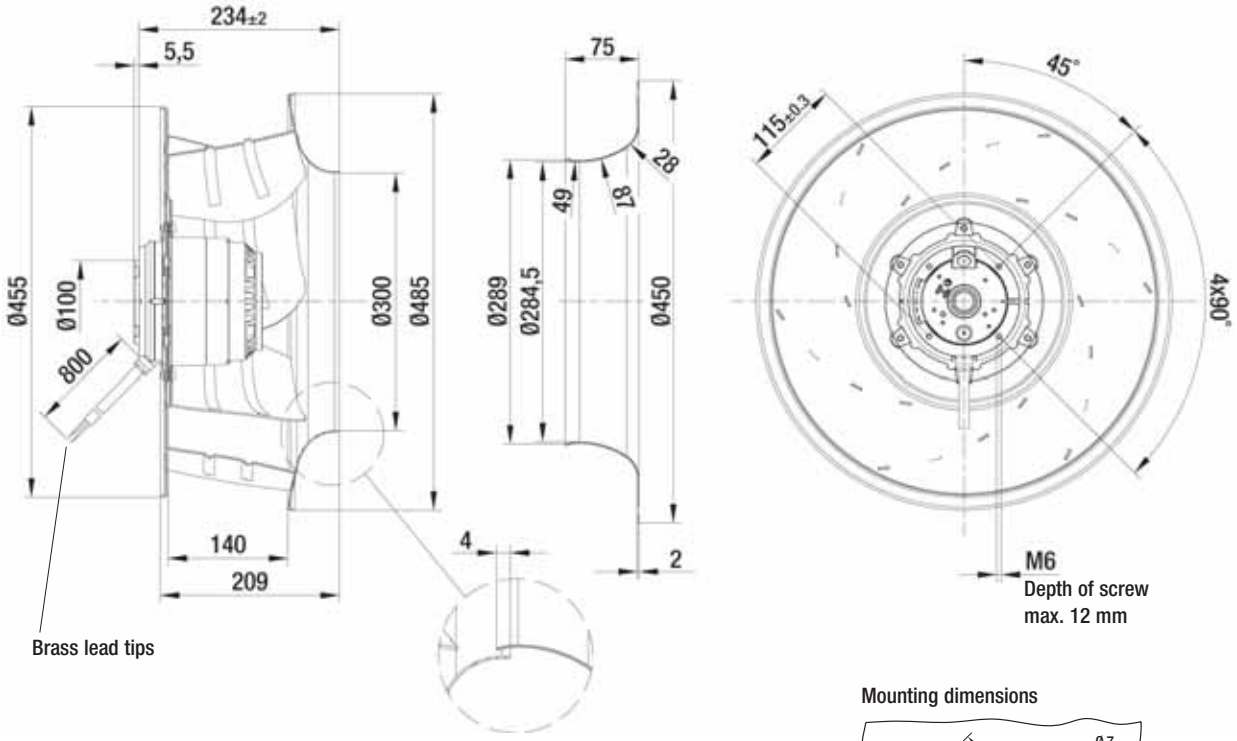

Mounting dimensions

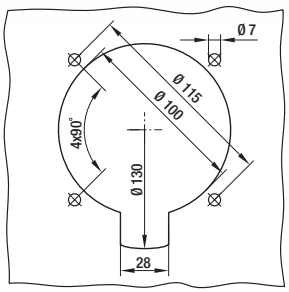

AC centrifugal fans

backward curved, 3-D, Ø 450

- **Material:** Impeller: Sheet aluminium, welded
  Rotor: Cast in aluminium
- **Number of blades:** 6
- **Direction of rotation:** Clockwise, seen on rotor
- **Type of protection:** IP 54 (acc. to EN 60529)
- **Insulation class:** "F"
- **Mounting position:** Any
- **Condensate discharge holes:** On rotor and stator sides
- **Mode of operation:** Continuous operation (S1)
- **Bearings:** Maintenance-free ball bearings

Nominal data

Type	Motor	Curve	Nominal voltage VAC	Frequency Hz	Speed/rpm (1) rpm	Max. power input (1) kW	Max. current draw (1) A	Capacitor µF/VDB	Perm. amb. temp. °C	Electr. connection p. 596 f.
R6D 450 (2)	M6D 110-EF	A	3~ 230/400	50	930	0.29	1.30/0.75	—	-40 to +85	D1)/D2)

subject to alterations

(1) Nominal data in operating point with maximum load (2) 230 VAC Δ / 400 VAC Y

Curves

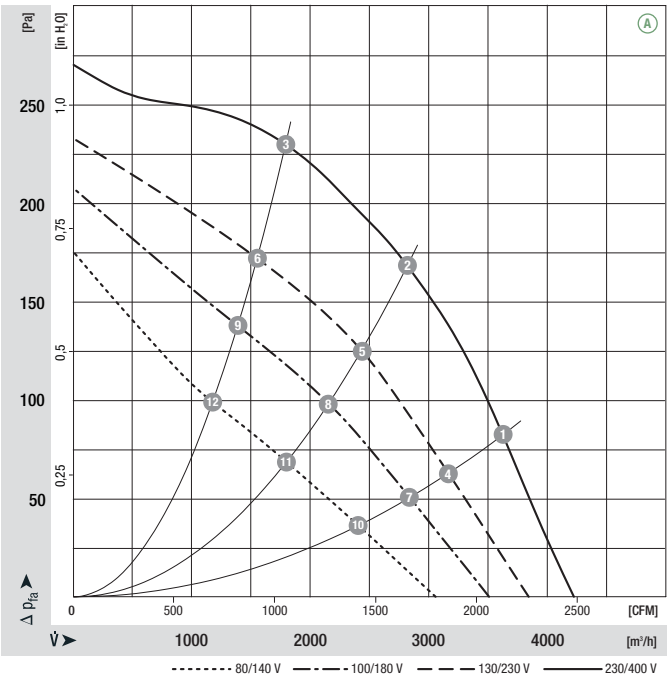

	n [rpm]	P_1 [kW]	I [A]	Lw_A [dB(A)]
A 1	950	0.25	1.12/0.65	66
A 2	940	0.28	1.15/0.66	63
A 3	950	0.26	1.12/0.65	65
A 4	830	0.18	0.92/0.53	61
A 5	805	0.20	1.00/0.58	58
A 6	825	0.18	0.94/0.54	60
A 7	735	0.15	0.94/0.54	58
A 8	705	0.16	1.01/0.58	54
A 9	730	0.15	0.95/0.55	58
A 10	615	0.11	0.90/0.52	52
A 11	580	0.11	0.94/0.54	48
A 12	610	0.11	0.90/0.52	52

ebmpapst

- **Motor protection:** Design with thermal overload protector
- **Cable exit:** Diagonal
- **Protection class:** I (acc. to EN 61800-5-1)
- **Product conforming to standard:** CE
- **Approvals:** VDE (acc. to EN 60034)

Centrifugal fan	Mass of centrifugal fan kg	Inlet nozzle (long)
R6D 450-AN01 -01	10.0	63045-2-4013

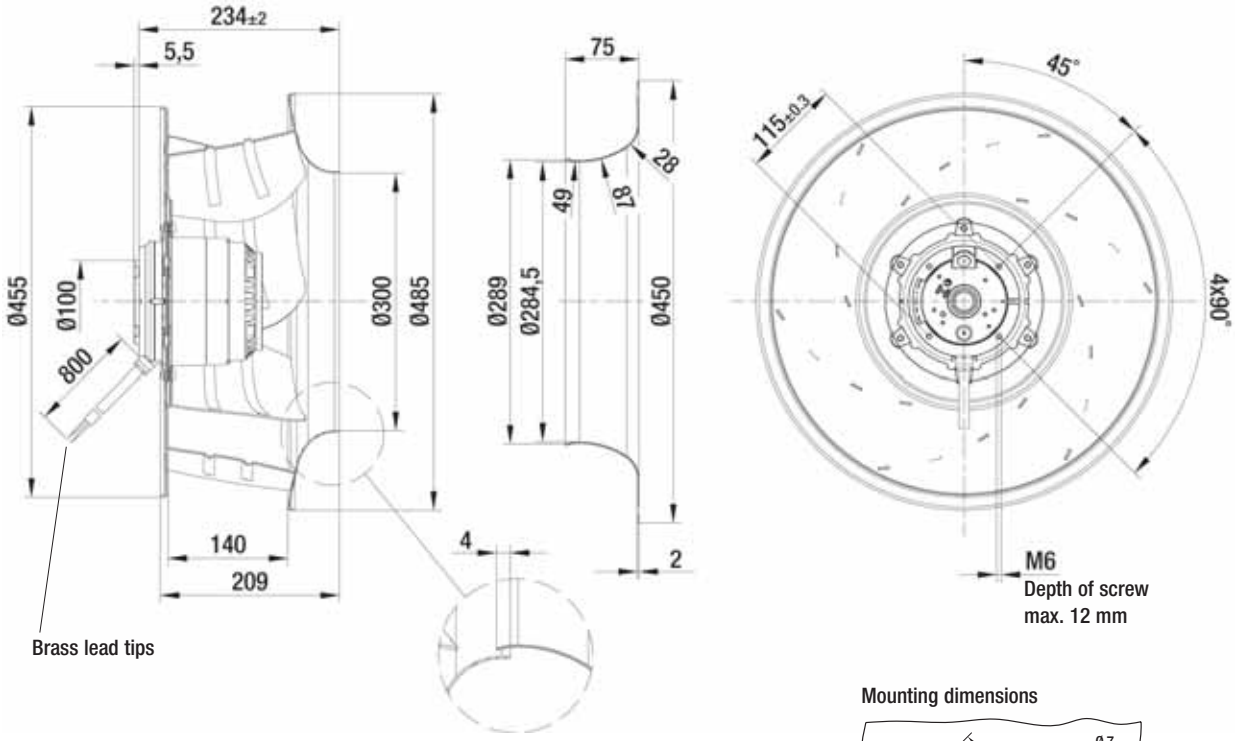

Mounting dimensions

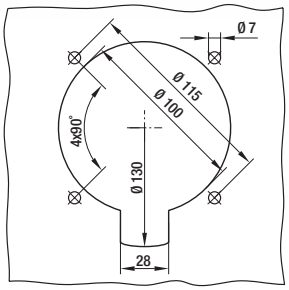

Inlet nozzle p. 550
Guard grille p. 553
Electr. connections p. 596 f.

AC centrifugal fans

backward curved, 3-D, Ø 450

- **Material:** Impeller: Sheet aluminium, welded
  Rotor: Cast in aluminium
- **Number of blades:** 6
- **Direction of rotation:** Clockwise, seen on rotor
- **Type of protection:** IP 54 (acc. to EN 60529)
- **Insulation class:** "F"
- **Mounting position:** Any
- **Condensate discharge holes:** On rotor and stator sides
- **Mode of operation:** Continuous operation (S1)
- **Bearings:** Maintenance-free ball bearings

Nominal data

Type	Motor	Curve	Nominal voltage VAC	Frequency Hz	Speed/rpm (1) rpm	Max. power input (1) kW	Max. current draw (1) A	Capacitor µF/VDB	Perm. amb. temp. °C	Electr. connection p. 596 f.
R6E 450	M6E 110-EF	A	1~ 230	50	930	0.30	1.42	8.0 / 450	-40 to +70	A2a)

subject to alterations

(1) Nominal data in operating point with maximum load

Curves

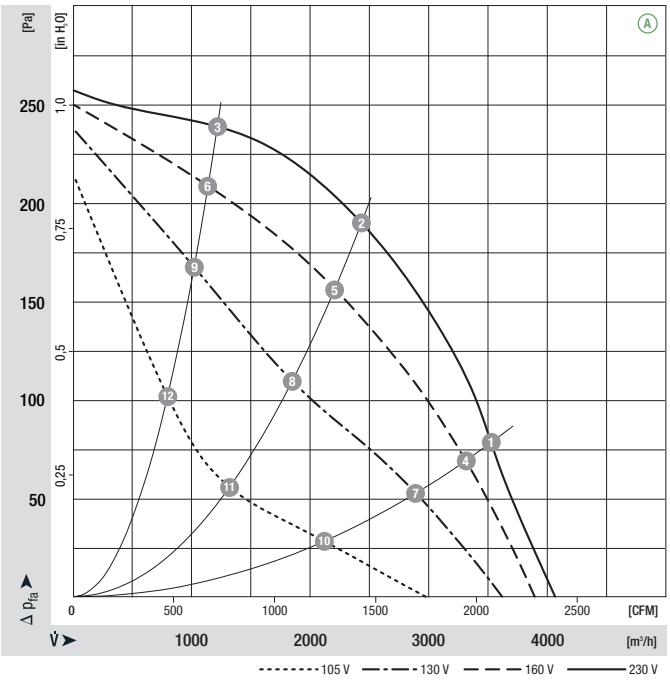

	n [rpm]	P_1 [kW]	I [A]	Lw_A [dB(A)]
A 1	945	0.27	1.30	65
A 2	935	0.29	1.38	61
A 3	945	0.27	1.28	67
A 4	865	0.21	1.30	62
A 5	840	0.22	1.40	59
A 6	880	0.19	1.20	64
A 7	740	0.17	1.41	58
A 8	665	0.18	1.50	53
A 9	775	0.16	1.39	61
A 10	520	0.12	1.30	48
A 11	465	0.12	1.38	44
A 12	565	0.12	1.30	52

ebmpapst

- **Motor protection:** Design with thermal overload protector
- **Cable exit:** Diagonal
- **Protection class:** I (acc. to EN 61800-5-1)
- **Product conforming to standard:** CE
- **Approvals:** VDE (acc. to EN 60034)

Centrifugal fan	Mass of centrifugal fan kg	Inlet nozzle (long)
R6E 450-AN01 -01	10.0	63045-2-4013

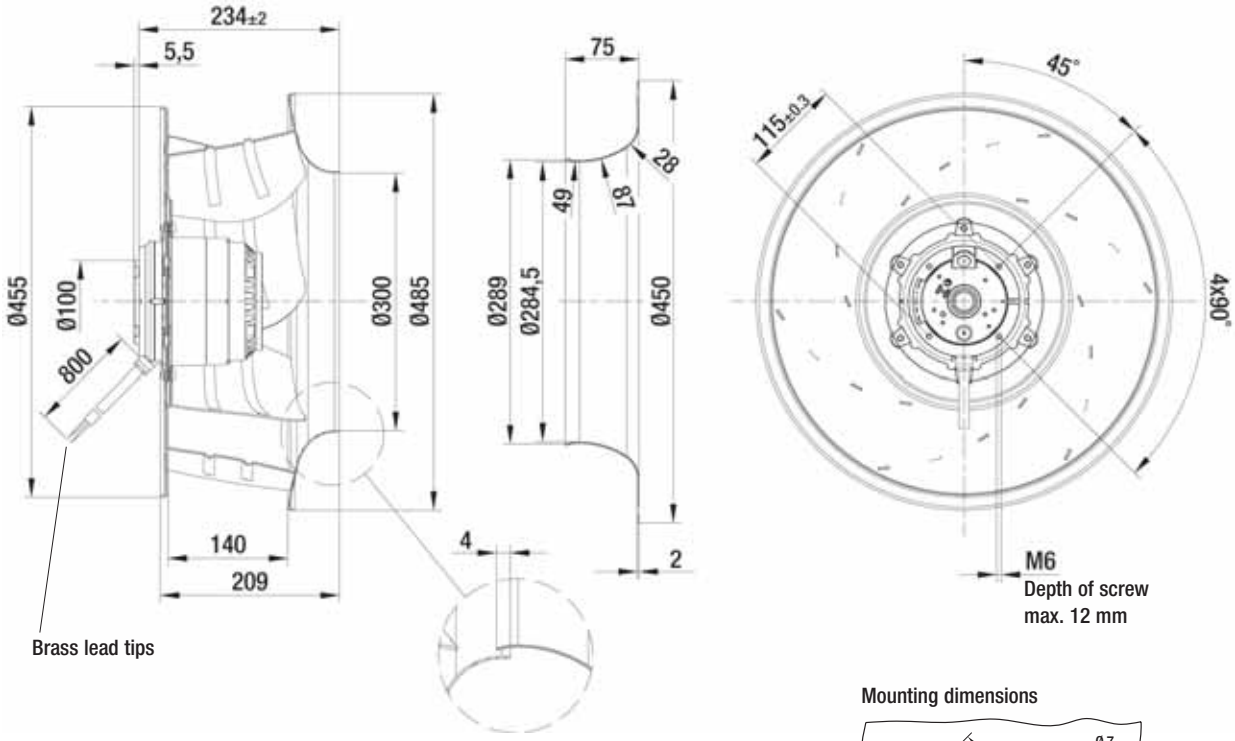

Mounting dimensions

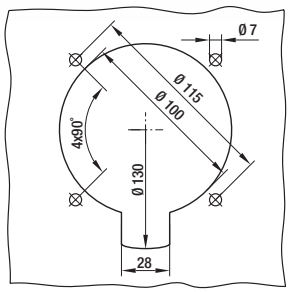

AC centrifugal fans

backward curved, Ø 450

- **Material:** Impeller: Sheet aluminium, riveted
  Rotor: Coated in black
- **Number of blades:** 6
- **Direction of rotation:** Clockwise, seen on rotor
- **Type of protection:** IP 54 (acc. to EN 60529)
- **Insulation class:** "F"
- **Mounting position:** Any
- **Condensate discharges:** None
- **Mode of operation:** Continuous operation (S1)
- **Bearings:** Maintenance-free ball bearings

Nominal data

Type	Motor	Curve	Nominal voltage VAC	Frequency Hz	Speed/rpm (1) rpm	Max. power input (1) W	Max. current draw (1) A	Capacitor µF/VDB	Perm. amb. temp. °C	Electr. connection p. 596 f.
R4D 450	M4D 094-HA	A	3~ 400 Δ	50	1380	665	1.55	—	-40 to +50	F1a)/F2a)
		B	3~ 400 Y	50	1130	470	0.82	—	-40 to +55	
R4E 450	M4E 094-HA	C	1~ 230	50	1290	640	3.10	10.0 / 400	-40 to +50	A2a)
R6E 450	M6E 094-HA	D	1~ 230	50	905	320	1.56	10.0 / 400	-40 to +40	A2a)
			1~ 230	60	1010	425	1.86	10.0 / 450	-40 to +55	

subject to alterations

(1) Nominal data in operating point with maximum load

Curves

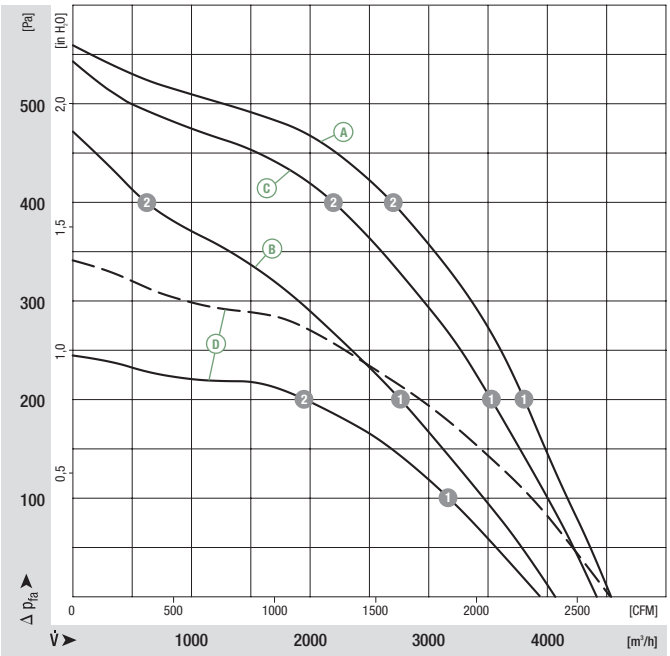

	n [rpm]	P_1 [W]	I [A]	Lp_A [dB(A)]
A 1	1390	610	1.52	70
A 2	1380	650	1.53	69
B 1	1130	470	0.82	64
B 2	1260	350	0.65	68
C 1	1310	602	2.97	69
C 2	1310	596	2.92	68
D 1	910	305	1.50	61
D 2	905	310	1.53	58

ebmpapst

- **Motor protection:** Design with thermal overload protector
- **Cable exit:** Diagonal
- **Protection class:** I (acc. to EN 61800-5-1)
- **Product conforming to standard:** CE

Centrifugal fan	Mass of centrifugal fan kg	Dimensions b	c	g	Inlet nozzle (long)
R4D 450-AD22 -06	9.3	175.0	204.0	120.0	54478-2-4013
R4E 450-AB09 -06	9.3	175.0	204.0	120.0	54478-2-4013
R6E 450-AB06 -06	9.6	215.0	244.0	160.0	54478-2-4013

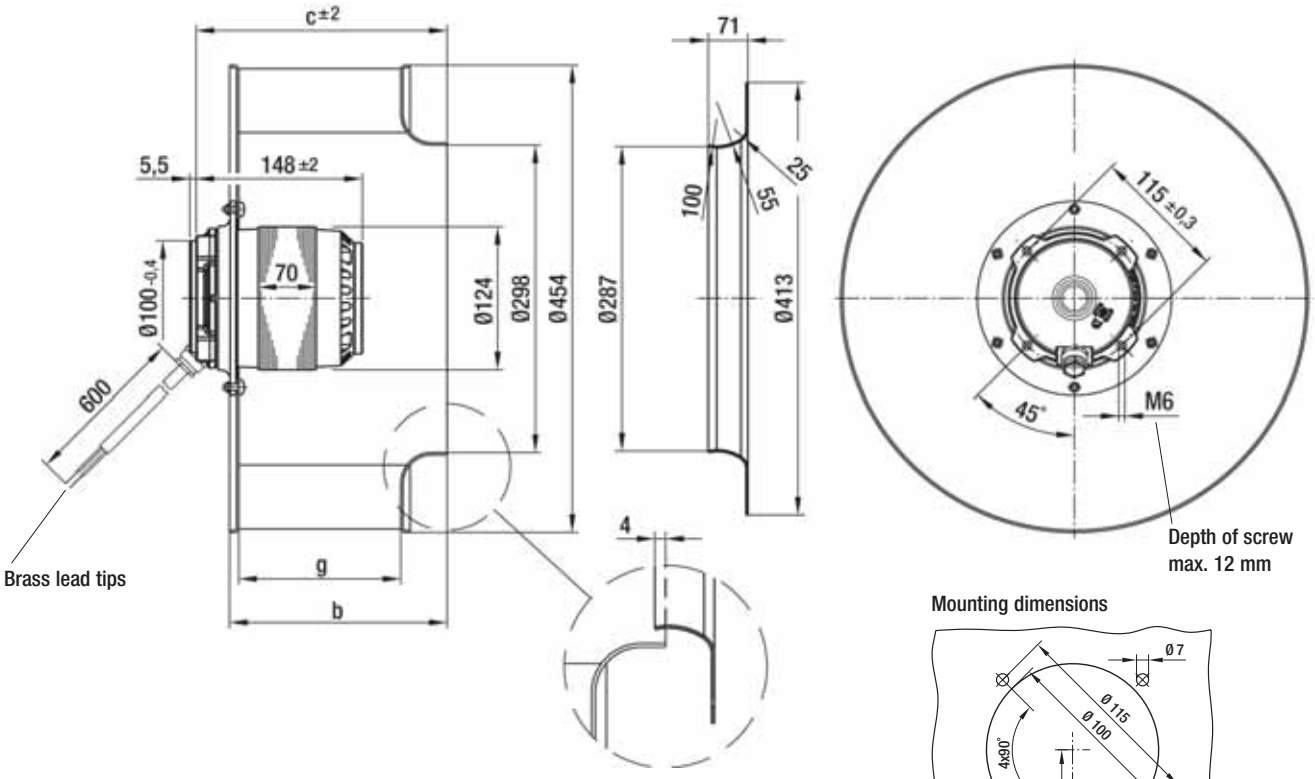

Mounting dimensions

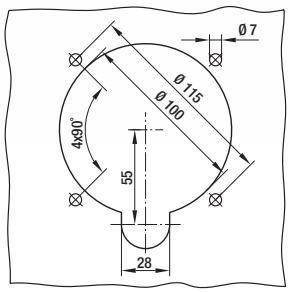

Inlet nozzle p. 550
Guard grille p. 553
Capacitor p. 560 f.
Electr. connections p. 596 f.

AC centrifugal fans

backward curved, 3-D, Ø 500

- **Material:** Impeller: Sheet aluminium, welded
  Rotor: Cast in aluminium
- **Number of blades:** 9
- **Direction of rotation:** Clockwise, seen on rotor
- **Type of protection:** IP 54 (acc. to EN 60529)
- **Insulation class:** "F"
- **Mounting position:** Any
- **Condensate discharge holes:** On rotor and stator sides
- **Mode of operation:** Continuous operation (S1)
- **Bearings:** Maintenance-free ball bearings

Nominal data

Type	Motor	Curve	Nominal voltage VAC	Frequency Hz	Speed/rpm (1) rpm	Max. power input (1) kW	Max. current draw (1) A	Capacitor µF/VDB	Perm. amb. temp. °C	Electr. connection p. 596 f.
R4D 500(2)	M4D 138-HF	A	3~ 230/400	50	1375	1.43	5.20/3.00	—	-40 to +80	D1)/D2)

subject to alterations (1) Nominal data in operating point with maximum load (2) 230 VAC Δ / 400 VAC Y

Curves

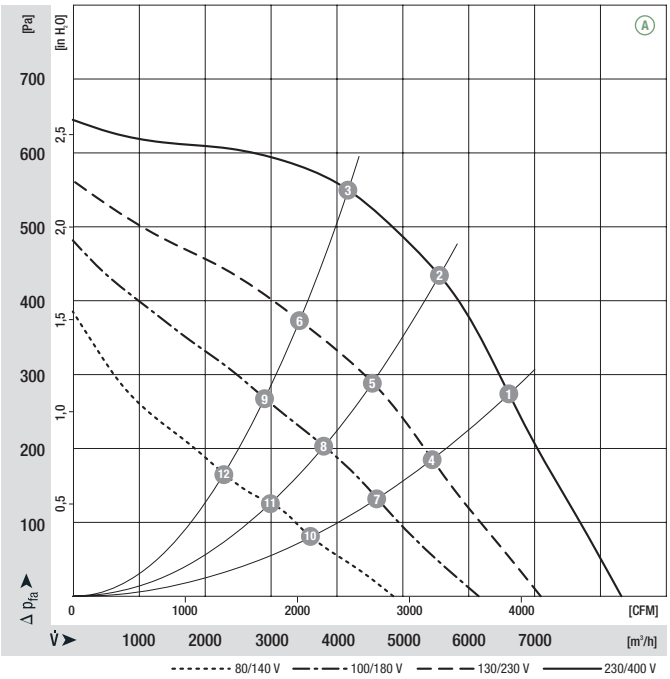

	n [rpm]	P_1 [kW]	I [A]	Lw_A [dB(A)]
A 1	1380	1.36	4.99/2.88	81
A 2	1375	1.42	5.13/2.96	79
A 3	1375	1.43	5.20/3.00	77
A 4	1150	0.97	5.25/3.03	76
A 5	1125	1.00	5.42/3.13	74
A 6	1140	0.97	5.28/3.05	73
A 7	970	0.73	5.18/2.99	71
A 8	945	0.74	5.30/3.06	69
A 9	970	0.73	5.16/2.98	68
A 10	775	0.49	4.66/2.69	64
A 11	755	0.49	4.73/2.73	63
A 12	775	0.49	4.68/2.70	62

ebmpapst

- **Motor protection:** Design with thermal overload protector
- **Cable exit:** Lateral
- **Protection class:** I (acc. to EN 61800-5-1)
- **Product conforming to standard:** CE
- **Approvals:** VDE (acc. to EN 60034)

Centrifugal fan	Mass of centrifugal fan kg	Inlet nozzle (long)
R4D 500-AT03 -01	26.0	63072-2-4013

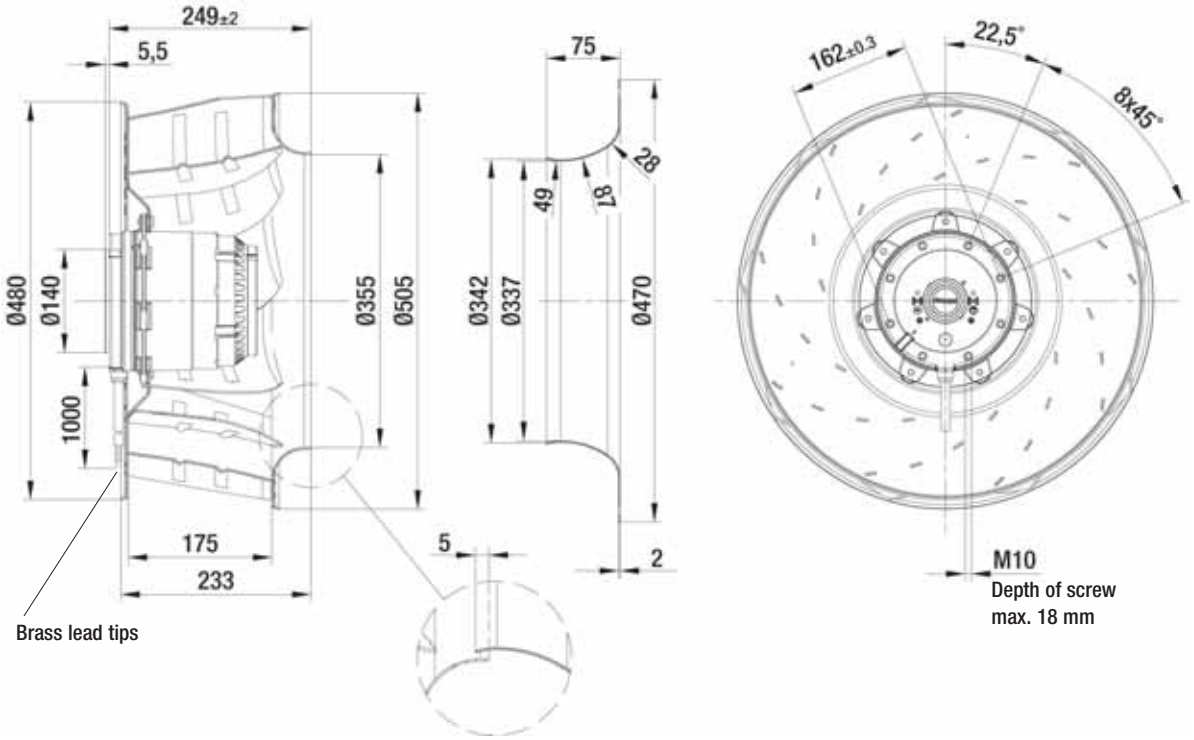

AC centrifugal fans

backward curved, 3-D, Ø 500

- **Material:** Impeller: Sheet aluminium, welded
  Rotor: Cast in aluminium
- **Number of blades:** 9
- **Direction of rotation:** Clockwise, seen on rotor
- **Type of protection:** IP 54 (acc. to EN 60529)
- **Insulation class:** "F"
- **Mounting position:** Any
- **Condensate discharge holes:** On rotor and stator sides
- **Mode of operation:** Continuous operation (S1)
- **Bearings:** Maintenance-free ball bearings

Nominal data

Type	Motor	Curve	Nominal voltage VAC	Frequency Hz	Speed/rpm (1) rpm	Max. power input (1) kW	Max. current draw (1) A	Capacitor µF/VDB	Perm. amb. temp. °C	Electr. connection p. 596 f.
R6D 500(2)	M6D 110-GF	A	3~ 230/400	50	910	0.48	1.90/1.10	—	-40 to +80	D1)/D2)

subject to alterations

(1) Nominal data in operating point with maximum load (2) 230 VAC Δ / 400 VAC Y

Curves

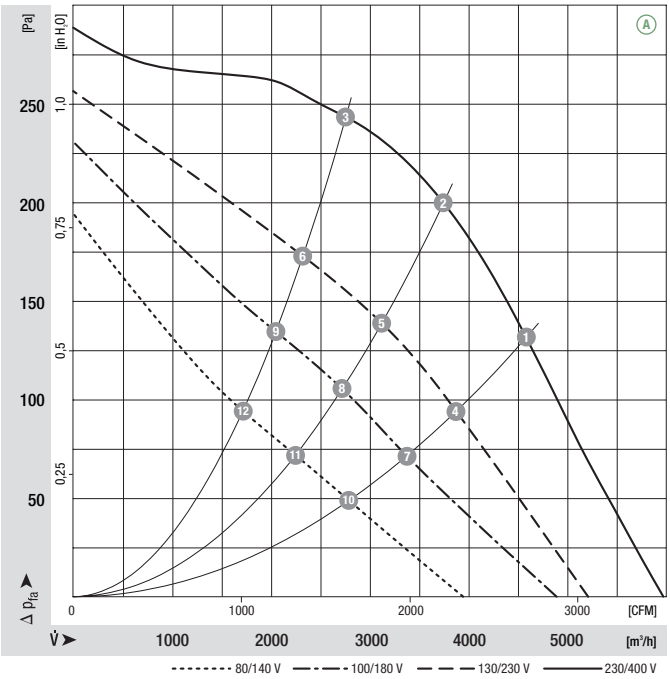

	n [rpm]	P_1 [kW]	I [A]	Lw_A [dB(A)]
A 1	915	0.45	1.73/1.00	68
A 2	910	0.47	1.77/1.02	65
A 3	915	0.44	1.69/0.98	66
A 4	760	0.31	1.66/0.96	62
A 5	745	0.32	1.72/1.00	60
A 6	770	0.30	1.60/0.93	61
A 7	650	0.23	1.59/0.92	57
A 8	630	0.24	1.64/0.95	55
A 9	665	0.23	1.57/0.90	57
A 10	530	0.16	1.43/0.82	52
A 11	510	0.16	1.45/0.84	49
A 12	545	0.16	1.41/0.81	52

ebmpapst

- **Motor protection:** Design with thermal overload protector
- **Cable exit:** Diagonal
- **Protection class:** I (acc. to EN 61800-5-1)
- **Product conforming to standard:** CE
- **Approvals:** VDE (acc. to EN 60034)

Centrifugal fan	Mass of centrifugal fan kg	Inlet nozzle (long)
R6D 500-AK03 -01	13.0	63072-2-4013

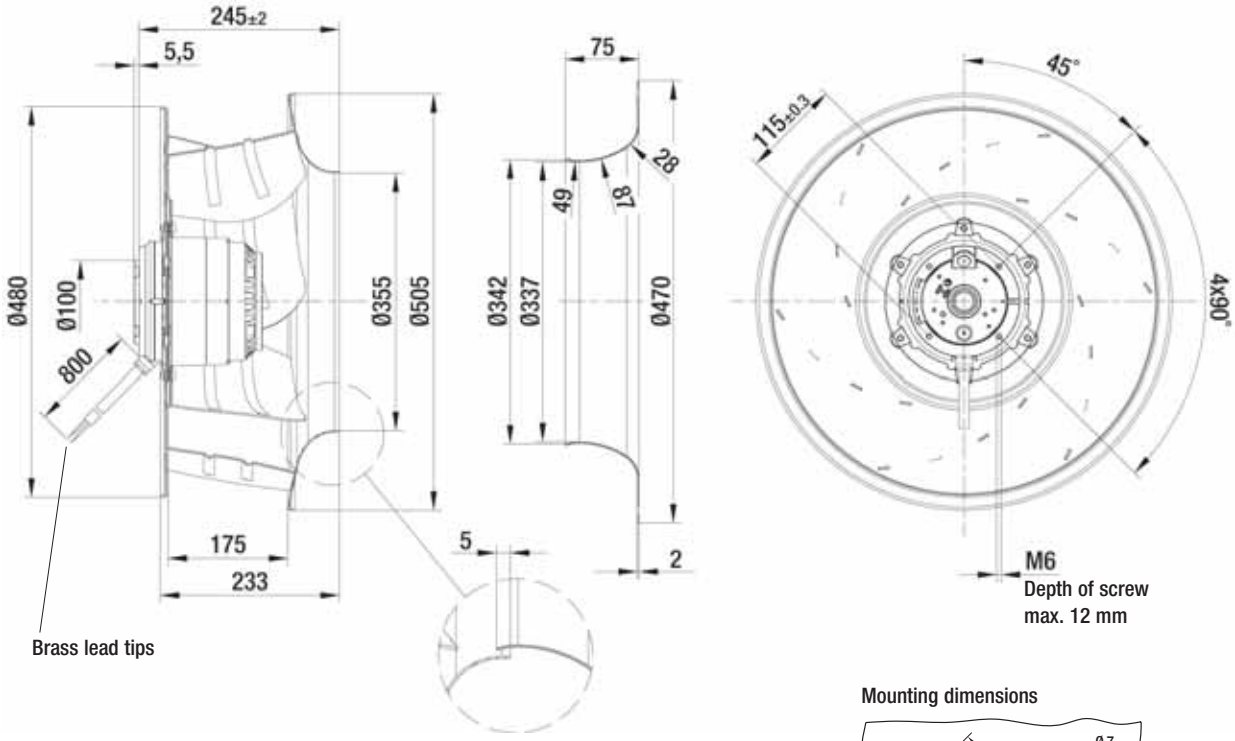

Mounting dimensions

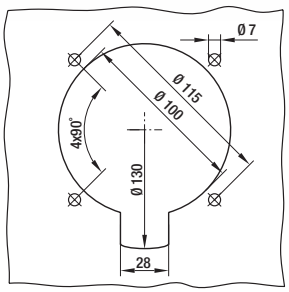

Inlet nozzle p. 550
Guard grille p. 553
Electr. connections p. 596 f.

AC centrifugal fans

backward curved, 3-D, Ø 500

- **Material:** Impeller: Sheet aluminium, welded
  Rotor: Cast in aluminium
- **Number of blades:** 9
- **Direction of rotation:** Clockwise, seen on rotor
- **Type of protection:** IP 54 (acc. to EN 60529)
- **Insulation class:** "F"
- **Mounting position:** Any
- **Condensate discharge holes:** On rotor and stator sides
- **Mode of operation:** Continuous operation (S1)
- **Bearings:** Maintenance-free ball bearings

Nominal data

Type	Motor	Curve	Nominal voltage VAC	Frequency Hz	Speed/rpm (1) rpm	Max. power input (1) kW	Max. current draw (1) A	Capacitor µF/VDB	Perm. amb. temp. °C	Electr. connection p. 596 f.
R6E 500	M6E 110-GF	A	1~ 230	50	910	0.51	2.34	12.0 / 450	-40 to +60	A2a)

subject to alterations

(1) Nominal data in operating point with maximum load

Curves

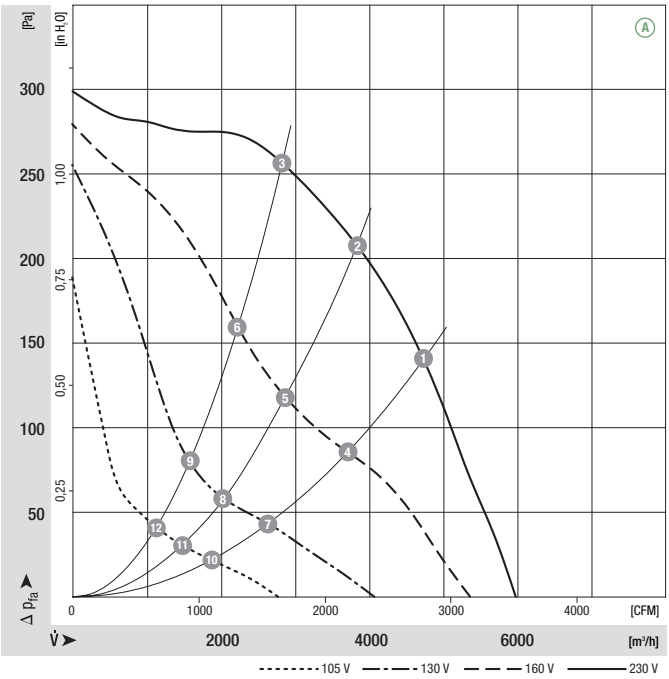

	n [rpm]	P_1 [kW]	I [A]	Lw_A [dB(A)]
A 1	915	0.49	2.24	70
A 2	910	0.51	2.33	67
A 3	915	0.48	2.22	68
A 4	720	0.37	2.55	62
A 5	690	0.38	2.64	60
A 6	730	0.37	2.50	61
A 7	515	0.27	2.35	52
A 8	485	0.27	2.37	49
A 9	510	0.27	2.34	52
A 10	370	0.17	1.94	46
A 11	355	0.17	1.94	44
A 12	375	0.17	1.94	45

ebmpapst

- **Motor protection:** Design with thermal overload protector
- **Cable exit:** Diagonal
- **Protection class:** I (acc. to EN 61800-5-1)
- **Product conforming to standard:** CE
- **Approvals:** VDE (acc. to EN 60034)

Centrifugal fan	Mass of centrifugal fan kg	Inlet nozzle (long)
R6E 500-AK01 -01	13.0	63072-2-4013

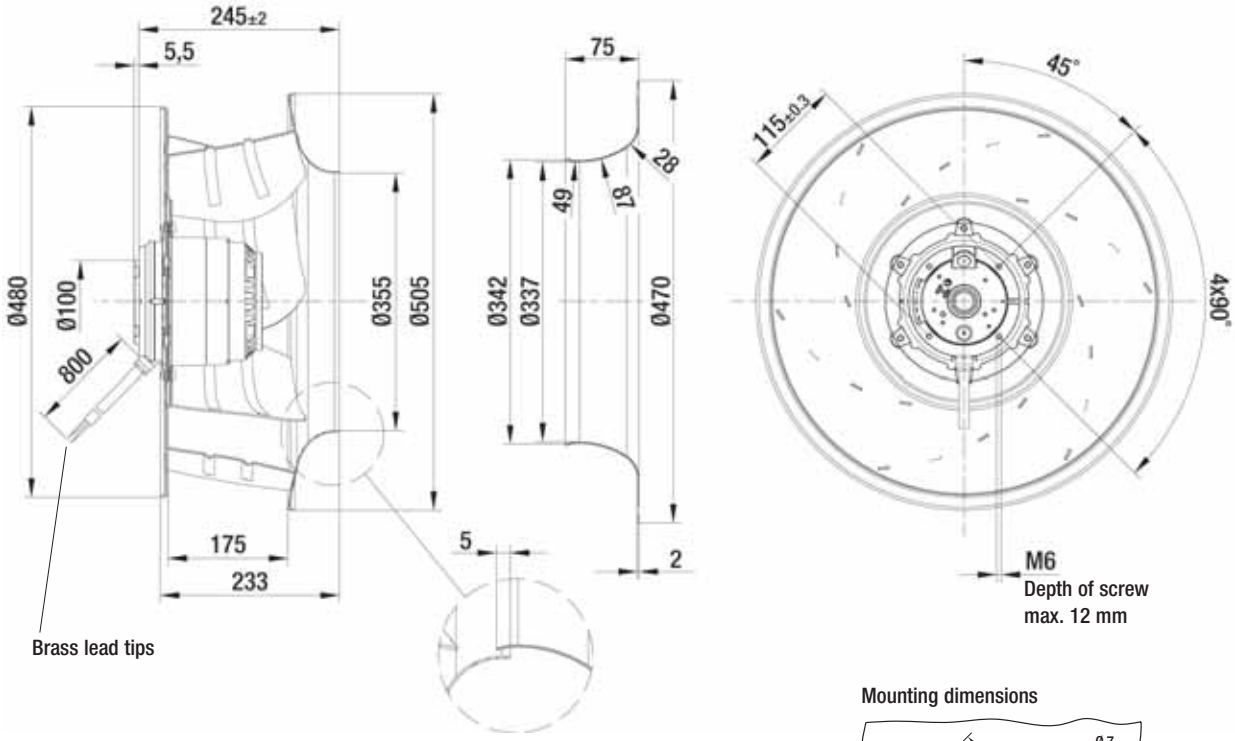

Mounting dimensions

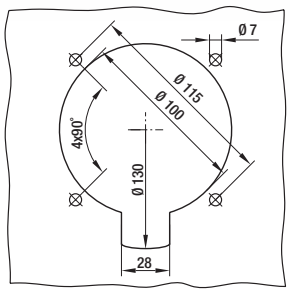

AC centrifugal fans

backward curved, Ø 500

- **Material:** Impeller: Sheet aluminium, riveted
  Rotor: Coated in black
- **Number of blades:** 6
- **Direction of rotation:** Clockwise, seen on rotor
- **Type of protection:** IP 54 (acc. to EN 60529)
- **Insulation class:** "F"
- **Mounting position:** Any
- **Condensate discharges:** None
- **Mode of operation:** Continuous operation (S1)
- **Bearings:** Maintenance-free ball bearings

Nominal data

Type	Motor	Curve	Nominal voltage VAC	Frequency Hz	Speed/rpm (1) rpm	Max. power input (1) W	Max. current draw (1) A	Capacitor µF/VDB	Perm. amb. temp. °C	Electr. connection p. 596 f.
R6E 500	M6E 094-HA	A	1~ 230	50	820	385	1.82	10.0 / 400	-40 to +40	A2a)
			1~ 230	60	850	475	2.10	10.0 / 450	-40 to +40	

subject to alterations

(1) Nominal data in operating point with maximum load

Curves

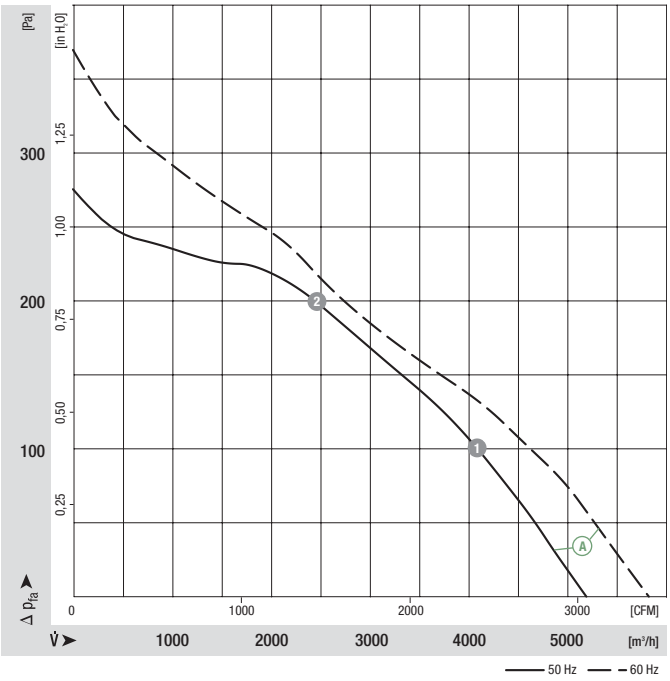

	n [rpm]	P_1 [W]	I [A]	Lp_A [dB(A)]
A 1	845	360	1.72	62
A 2	830	376	1.79	57

ebmpapst

- **Motor protection:** Design with thermal overload protector
- **Cable exit:** Diagonal
- **Protection class:** I (acc. to EN 61800-5-1)
- **Product conforming to standard:** CE

Centrifugal fan	Mass of centrifugal fan kg	Inlet nozzle (long)
R6E 500-AB05 -06	11.1	54480-2-4013

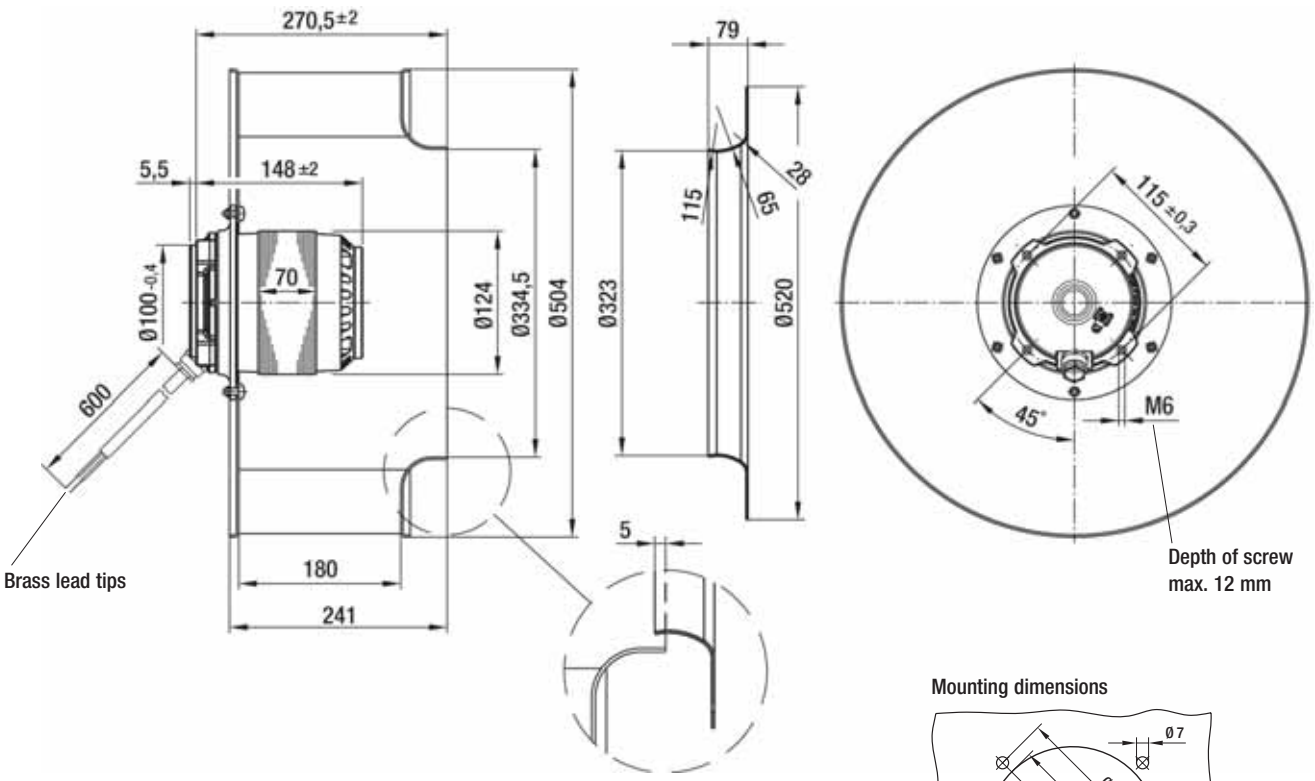

Mounting dimensions

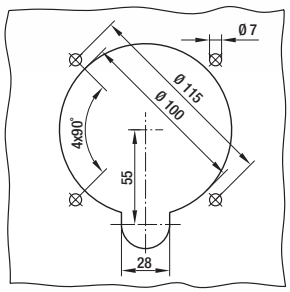

Inlet nozzle p. 550
Guard grille p. 553
Capacitor p. 560 f.
Electr. connections p. 596 f.

AC centrifugal fans

backward curved, 3-D, Ø 560

- **Material:** Impeller: Sheet aluminium, welded
  Rotor: Cast in aluminium
- **Number of blades:** 9
- **Direction of rotation:** Clockwise, seen on rotor
- **Type of protection:** IP 54 (acc. to EN 60529)
- **Insulation class:** "F"
- **Mounting position:** Any
- **Condensate discharge holes:** On rotor and stator sides
- **Mode of operation:** Continuous operation (S1)
- **Bearings:** Maintenance-free ball bearings

Nominal data

Type	Motor	Curve	Nominal voltage VAC	Frequency Hz	Speed/rpm (1) rpm	Max. power input (1) kW	Max. current draw (1) A	Capacitor µF/VDB	Perm. amb. temp. °C	Electr. connection p. 596 f.
R4D 560 (2)	M4D 138-LA	A	3~ 230/400	50	1365	2.38	8.66/5.00	—	-40 to +60	D1)/D2)

subject to alterations (1) Nominal data in operating point with maximum load (2) 230 VAC Δ / 400 VAC Y

Curves

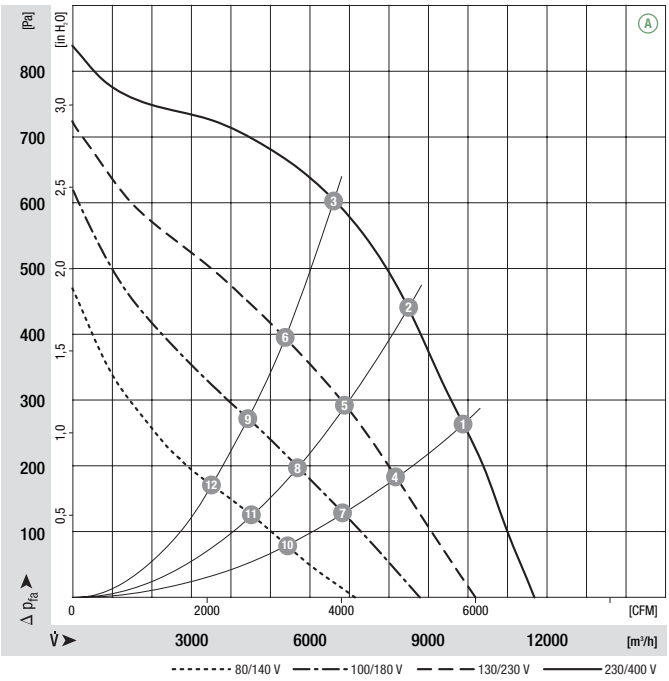

	n [rpm]	P_1 [kW]	I [A]	Lw_A [dB(A)]
A 1	1380	2.14	8.33/4.81	84
A 2	1370	2.33	8.66/5.00	82
A 3	1365	2.34	8.66/5.00	81
A 4	1140	1.53	8.31/4.80	77
A 5	1110	1.62	8.75/5.05	76
A 6	1105	1.62	8.73/5.04	75
A 7	955	1.13	8.11/4.68	74
A 8	920	1.17	8.42/4.86	73
A 9	915	1.17	8.38/4.84	71
A 10	765	0.77	7.31/4.22	70
A 11	735	0.78	7.45/4.30	67
A 12	730	0.78	7.47/4.31	65

ebmpapst

- **Motor protection:** Design with thermal overload protector
- **Cable exit:** Lateral
- **Protection class:** I (acc. to EN 61800-5-1)
- **Product conforming to standard:** CE
- **Approvals:** VDE (acc. to EN 60034)

Centrifugal fan	Mass of centrifugal fan kg	Inlet nozzle (long)
R4D 560-AQ03 -01	28.0	63071-2-4013

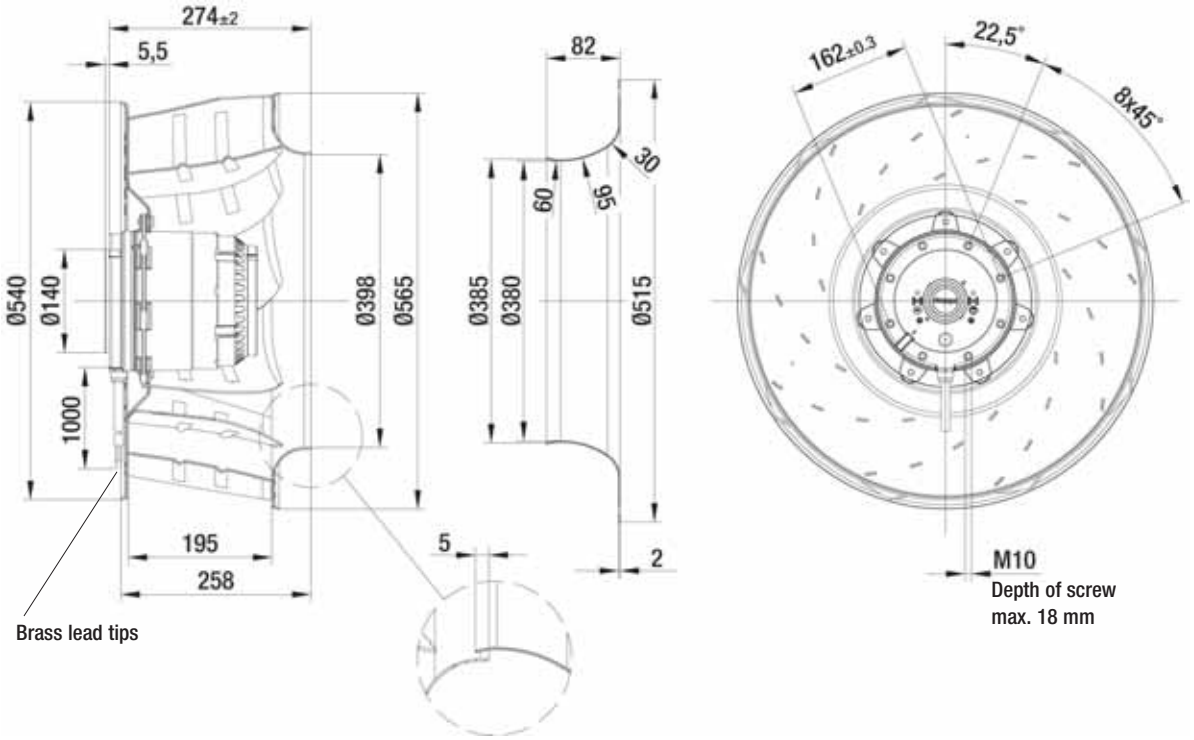

AC centrifugal fans

backward curved, 3-D, Ø 560

- **Material:** Impeller: Sheet aluminium, welded
  Rotor: Cast in aluminium
- **Number of blades:** 9
- **Direction of rotation:** Clockwise, seen on rotor
- **Type of protection:** IP 54 (acc. to EN 60529)
- **Insulation class:** "F"
- **Mounting position:** Any
- **Condensate discharge holes:** On rotor and stator sides
- **Mode of operation:** Continuous operation (S1)
- **Bearings:** Maintenance-free ball bearings

Nominal data

Type	Motor	Curve	Nominal voltage VAC	Frequency Hz	Speed/rpm (1) rpm	Max. power input (1) kW	Max. current draw (1) A	Capacitor µF/VDB	Perm. amb. temp. °C	Electr. connection p. 596 f.
R6D 560 (2)	M6D 110-IA	A	3~ 230/400	50	885	0.78	2.95/1.70	—	-40 to +55	D1)/D2)

subject to alterations

(1) Nominal data in operating point with maximum load (2) 230 VAC Δ / 400 VAC Y

Curves

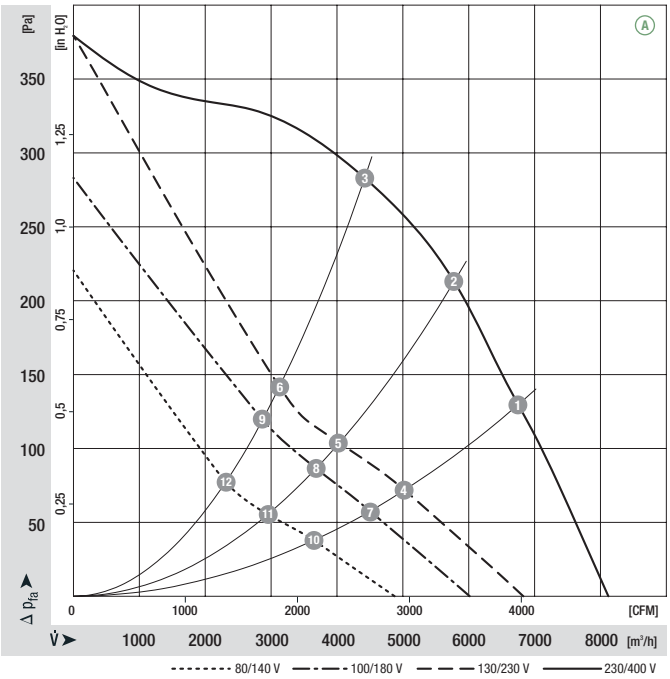

	n [rpm]	P_1 [kW]	I [A]	Lw_A [dB(A)]
A 1	905	0.68	2.71/1.56	71
A 2	890	0.76	2.87/1.65	69
A 3	890	0.76	2.85/1.64	69
A 4	665	0.48	2.85/1.64	68
A 5	610	0.49	2.89/1.67	58
A 6	605	0.49	2.88/1.66	59
A 7	595	0.32	2.31/1.34	65
A 8	560	0.33	2.40/1.39	58
A 9	565	0.33	2.39/1.38	57
A 10	480	0.21	1.99/1.15	54
A 11	450	0.21	2.03/1.17	50
A 12	450	0.18	2.03/1.17	50

ebmpapst

- **Motor protection:** Design with thermal overload protector
- **Cable exit:** Diagonal
- **Protection class:** I (acc. to EN 61800-5-1)
- **Product conforming to standard:** CE
- **Approvals:** VDE (acc. to EN 60034)

Centrifugal fan	Mass of centrifugal fan kg	Inlet nozzle (long)
R6D 560-AH05 -01	15.0	63071-2-4013

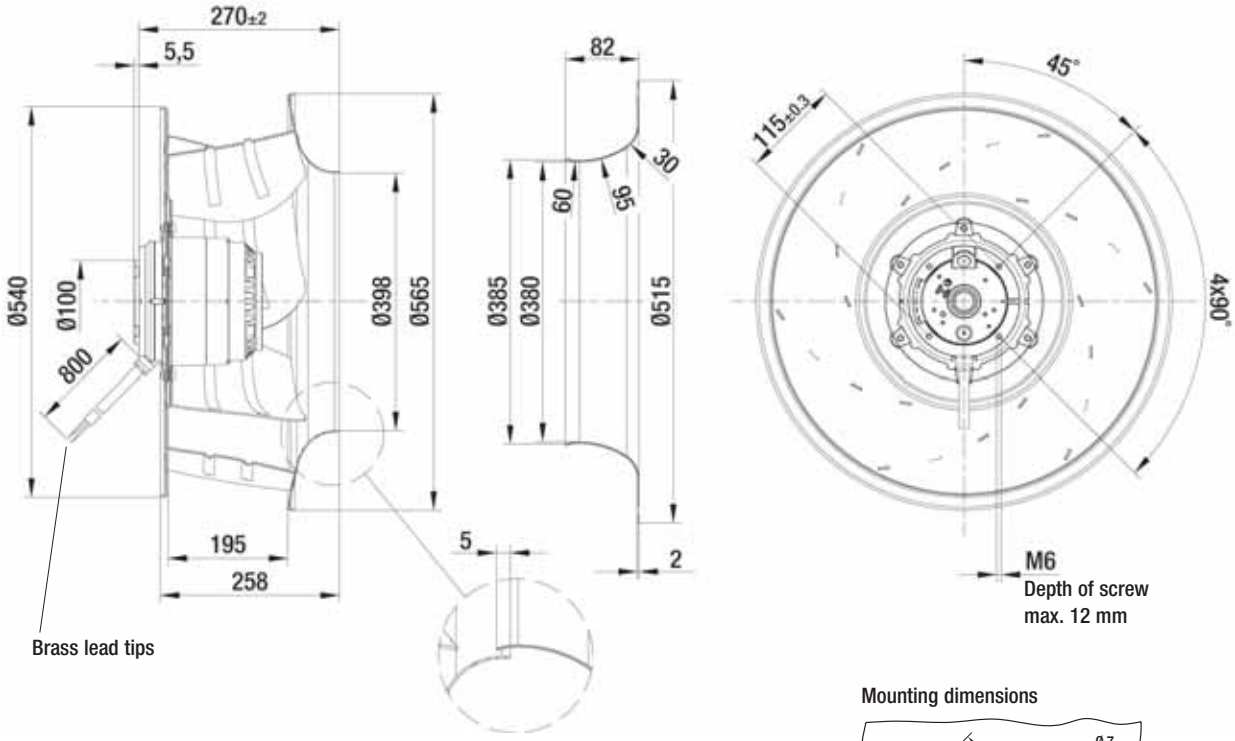

Mounting dimensions

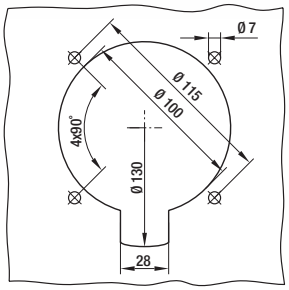

Inlet nozzle p. 550
Guard grille p. 553
Electr. connections p. 596 f.

AC centrifugal fans

backward curved, 3-D, Ø 630

- **Material:** Impeller: Sheet aluminium, welded
  Rotor: Cast in aluminium
- **Number of blades:** 9
- **Direction of rotation:** Clockwise, seen on rotor
- **Type of protection:** IP 20 (acc. to EN 60529)
- **Insulation class:** "F"
- **Mounting position:** Any
- **Condensate discharges:** None
- **Mode of operation:** Continuous operation (S1)
- **Bearings:** Maintenance-free ball bearings

Nominal data

Type	Motor	Curve	Nominal voltage VAC	Frequency Hz	Speed/rpm (1) rpm	Max. power input (1) kW	Max. current draw (1) A	Capacitor µF/VDB	Perm. amb. temp. °C	Electr. connection p. 596 f.
R4D 630 (2)	M4D 138-LA	A	3~ 230/400	50	1300	4.25	13.10/7.55	—	-40 to +60	D1)/D2)

subject to alterations

(1) Nominal data in operating point with maximum load (2) 230 VAC Δ / 400 VAC Y

Curves

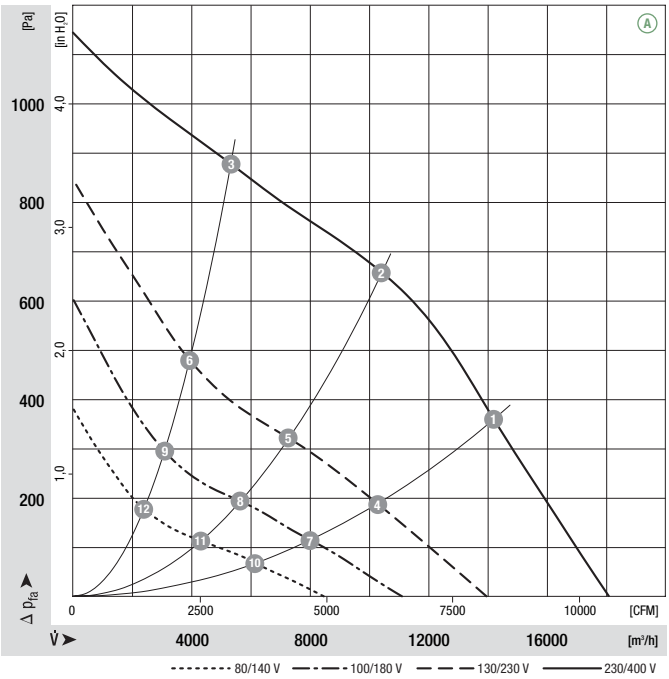

	n [rpm]	P_1 [kW]	I [A]	Lw_A [dB(A)]
A 1	1325	3.93	12.33/7.12	84
A 2	1300	4.21	13.01/7.51	82
A 3	1340	3.55	11.19/6.46	86
A 4	960	2.30	12.85/7.42	76
A 5	930	2.36	13.10/7.55	74
A 6	1005	2.19	12.13/7.01	78
A 7	745	1.50	11.32/6.53	70
A 8	725	1.54	11.49/6.63	69
A 9	785	1.46	11.03/6.37	71
A 10	575	0.94	9.47/5.47	63
A 11	550	0.94	9.54/5.51	61
A 12	610	0.93	9.34/5.39	64

ebmpapst

- **Motor protection:** Design with thermal overload protector
- **Cable exit:** Lateral
- **Protection class:** I (acc. to EN 61800-5-1)
- **Product conforming to standard:** CE
- **Approvals:** VDE (acc. to EN 60034)

Centrifugal fan	Mass of centrifugal fan kg	Inlet nozzle (long)
R4D 630-AQ03 -01	29.0	63070-2-4013

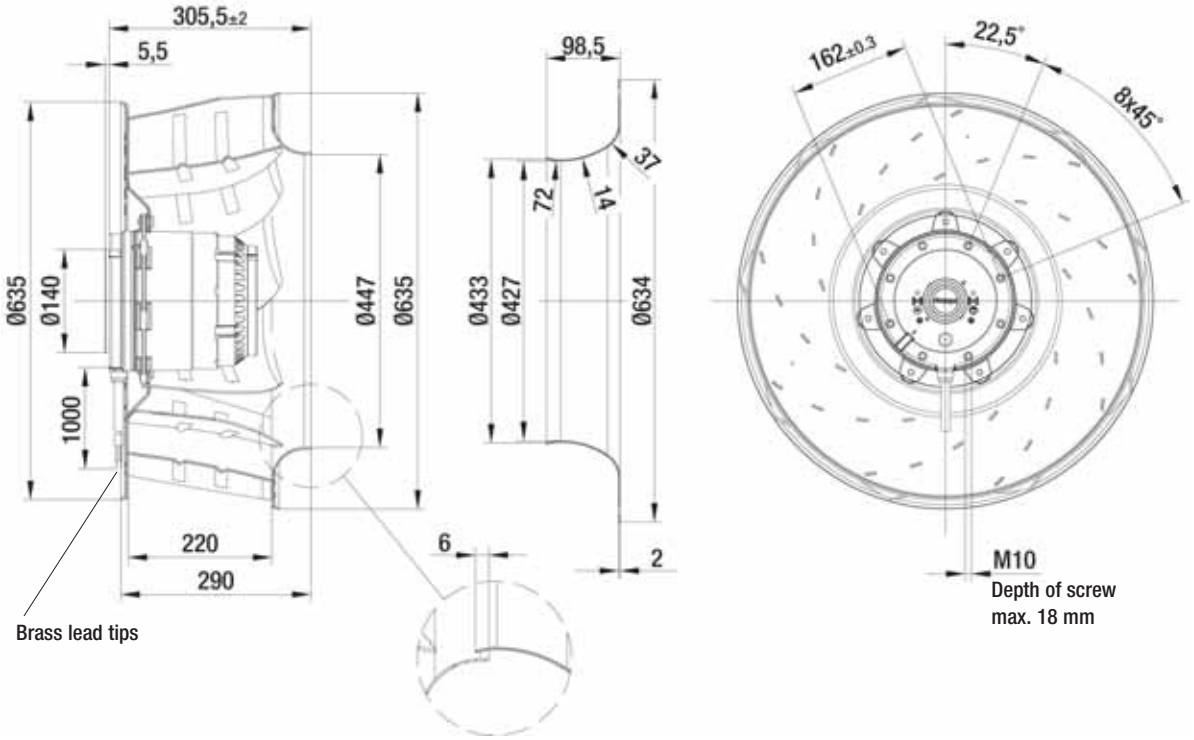

AC centrifugal fans

backward curved, 3-D, Ø 630

- **Material:** Impeller: Sheet aluminium, welded
  Rotor: Cast in aluminium
- **Number of blades:** 9
- **Direction of rotation:** Clockwise, seen on rotor
- **Type of protection:** IP 54 (acc. to EN 60529)
- **Insulation class:** "F"
- **Mounting position:** Any
- **Condensate discharge holes:** On rotor and stator sides
- **Mode of operation:** Continuous operation (S1)
- **Bearings:** Maintenance-free ball bearings

Nominal data

Type	Motor	Curve	Nominal voltage VAC	Frequency Hz	Speed/rpm (1) rpm	Max. power input (1) kW	Max. current draw (1) A	Capacitor µF/VDB	Perm. amb. temp. °C	Electr. connection p. 596 f.
R4D 630 (2)	M4D 138-NA	A	3~ 230/400	50	1170	3.31	10.74/6.20	—	-40 to +35	D1)/D2)

subject to alterations

(1) Nominal data in operating point with maximum load (2) 230 VAC Δ / 400 VAC Y

Curves

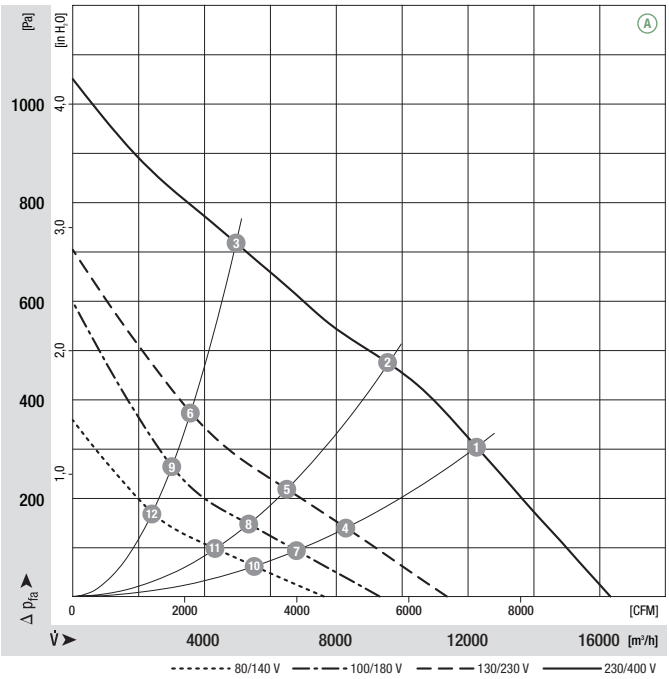

	n [rpm]	P_1 [kW]	I [A]	Lw_A [dB(A)]
A 1	1170	3.11	10.09/5.83	81
A 2	1145	3.21	10.30/5.95	79
A 3	1200	2.84	9.18/5.30	83
A 4	785	1.42	8.06/4.65	70
A 5	760	1.42	8.09/4.67	68
A 6	830	1.35	7.65/4.41	72
A 7	640	0.93	6.77/3.91	65
A 8	625	0.93	6.78/3.92	63
A 9	685	0.89	6.52/3.76	66
A 10	520	0.59	5.57/3.22	59
A 11	510	0.59	5.56/3.21	58
A 12	550	0.57	5.40/3.12	60

ebmpapst

- **Motor protection:** Design with thermal overload protector
- **Cable exit:** Lateral
- **Protection class:** I (acc. to EN 61800-5-1)
- **Product conforming to standard:** CE
- **Approvals:** VDE (acc. to EN 60034)

Centrifugal fan	Mass of centrifugal fan kg	Inlet nozzle (long)
R4D 630-AW01 -01	31.0	63070-2-4013

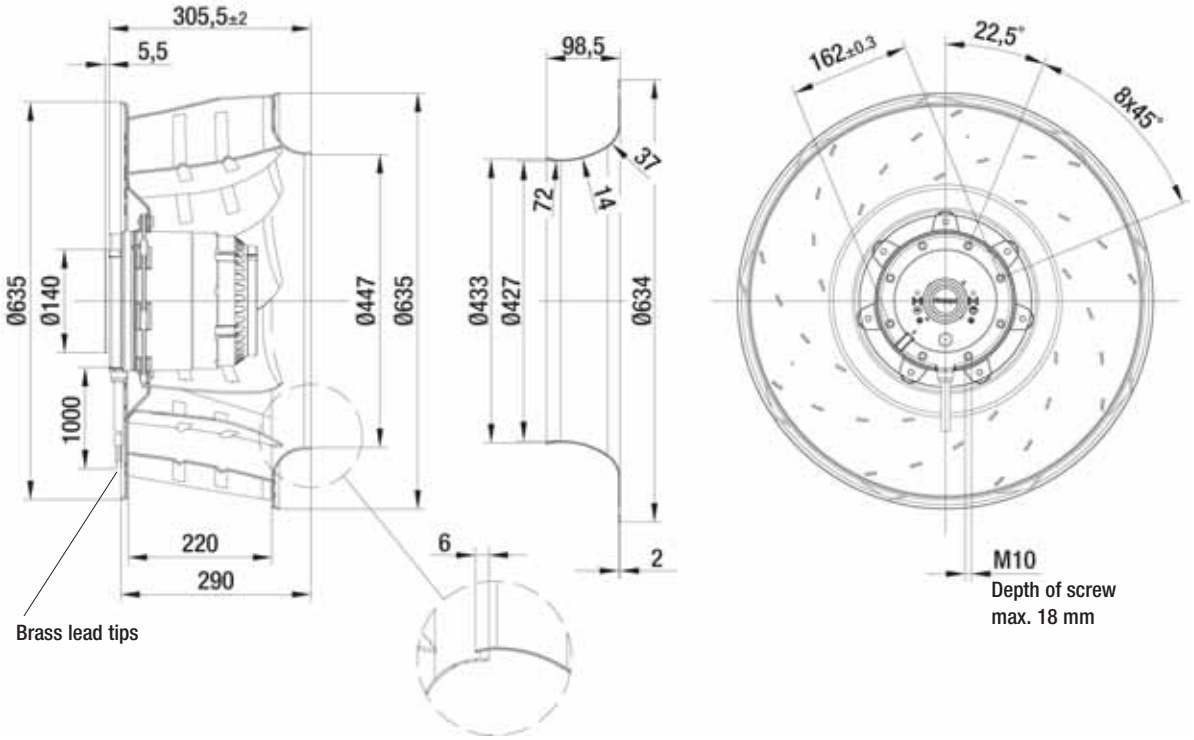

AC centrifugal fans

backward curved, 3-D, Ø 630

- **Material:** Impeller: Sheet aluminium, welded
  Rotor: Cast in aluminium
- **Number of blades:** 9
- **Direction of rotation:** Clockwise, seen on rotor
- **Type of protection:** IP 54 (acc. to EN 60529)
- **Insulation class:** "F"
- **Mounting position:** Any
- **Condensate discharge holes:** On rotor and stator sides
- **Mode of operation:** Continuous operation (S1)
- **Bearings:** Maintenance-free ball bearings

Nominal data

Type	Motor	Curve	Nominal voltage VAC	Frequency Hz	Speed/rpm (1) rpm	Max. power input (1) kW	Max. current draw (1) A	Capacitor µF/VDB	Perm. amb. temp. °C	Electr. connection p. 596 f.
R6D 630 (2)	M6D 138-HF	A	3~ 230/400	50	880	1.31	4.85/2.80	—	-40 to +60	D1)/D2)

subject to alterations

(1) Nominal data in operating point with maximum load (2) 230 VAC Δ / 400 VAC Y

Curves

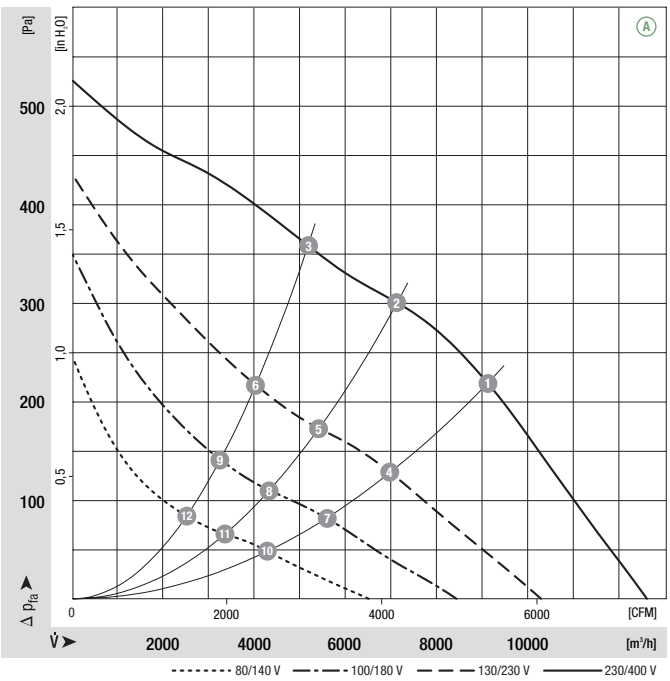

	n [rpm]	P_1 [kW]	I [A]	Lw_A [dB(A)]
A 1	885	1.28	4.85/2.80	73
A 2	885	1.30	4.82/2.79	73
A 3	890	1.23	4.65/2.69	73
A 4	675	0.82	4.72/2.72	67
A 5	675	0.82	4.75/2.74	67
A 6	690	0.80	4.59/2.65	67
A 7	540	0.57	4.37/2.52	60
A 8	535	0.56	4.35/2.51	60
A 9	560	0.57	4.27/2.46	61
A 10	420	0.36	3.72/2.15	54
A 11	415	0.36	3.74/2.16	54
A 12	430	0.36	3.70/2.14	54

ebmpapst

- **Motor protection:** Design with thermal overload protector
- **Cable exit:** Lateral
- **Protection class:** I (acc. to EN 61800-5-1)
- **Product conforming to standard:** CE
- **Approvals:** VDE (acc. to EN 60034)
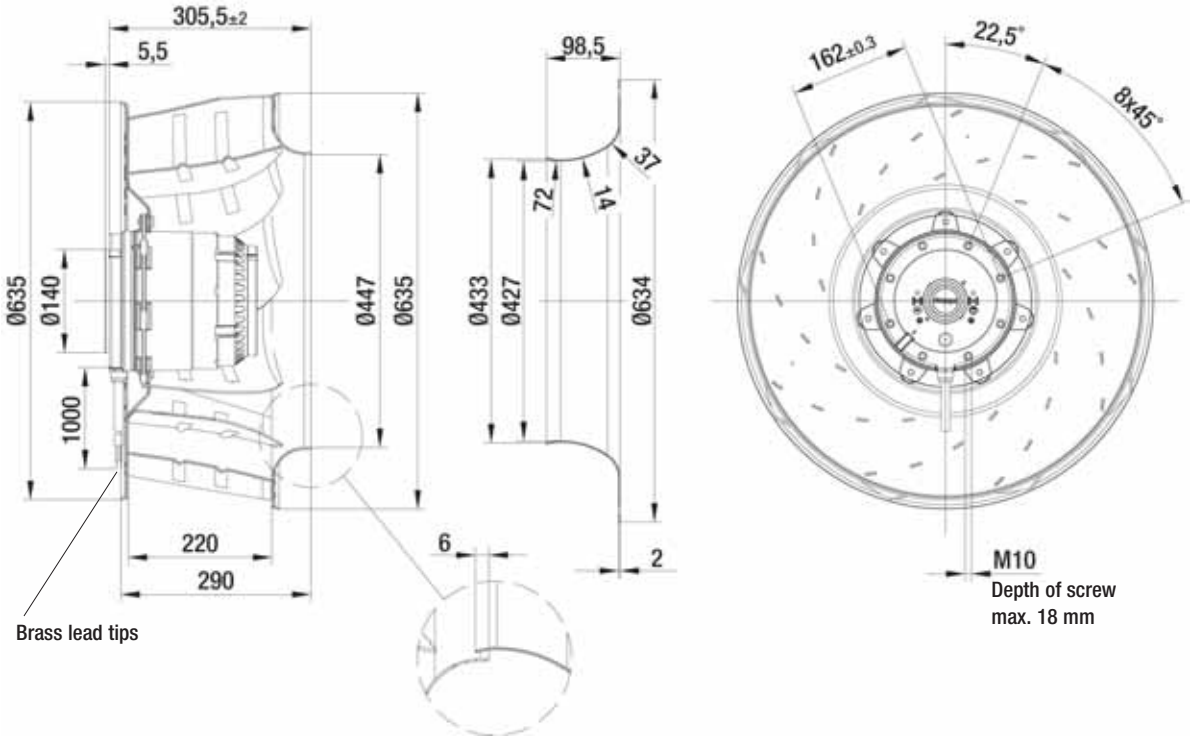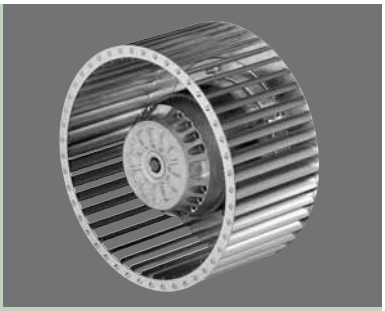
Centrifugal fan	Mass of centrifugal fan kg	Inlet nozzle (long)
R6D 630-AT03 -01	27.0	63070-2-4013