AC / EC Transformer Fans

Version 05/2007

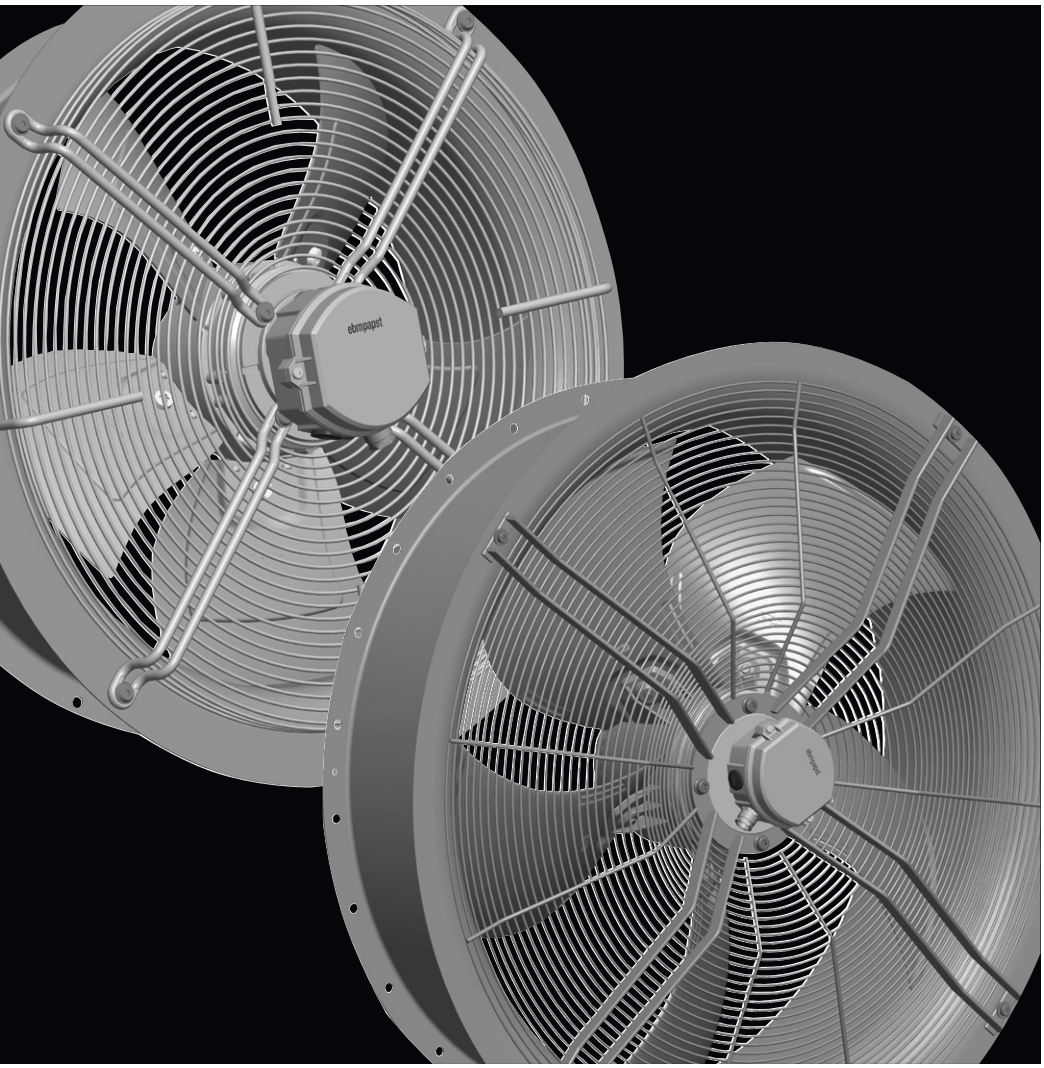

The engineer's choice

ebmpapst

The new AC / EC transformer fans from ebm-papst

Axial fans with external-rotor motors in AC and EC technology are our world. What is new is that they are now used for transformer cooling. But then again, why not? After all, efficiency, low noise and total reliability are called for in such an application, too!
And so our new AC / EC transformer fans are first choice with project and design engineers, not only when it comes to transformer cooling.

Robust, quiet and speed-controlled

The new transformer fans with asynchronous and EC motor drives are now also available for the more demanding use with power transformers. The line goes up without gap from size 450 mm to 990 mm in outer diameter.

The transformer fans consist of the components motor impeller, motor support structure and duct nozzle.

Depending on the size, the motor impeller is made up of either an AC or EC external-rotor motor with screwed on hybrid blades made of die-cast aluminium or plastic / aluminium.

The motor support structure is on the suction side. This also makes for compliance with protection against accidental contact.

The duct nozzle is made of dip galvanised sheet steel. On the pressure side, there is a circumferential flange that ensures the fan can be directly screwed onto the oil radiator.

These new fans with their excellent design and functionality are the result of intensive research and the expertise that comes with years of pioneering developments, supported by comprehensive computations and simulations especially with respect to long service life and corrosion resistance.

Table of content

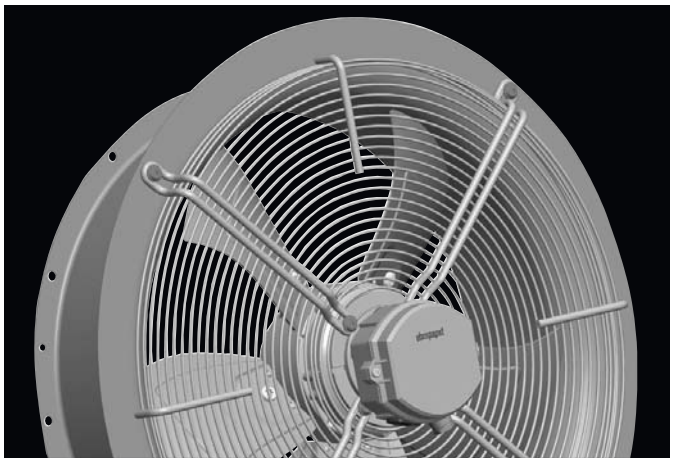

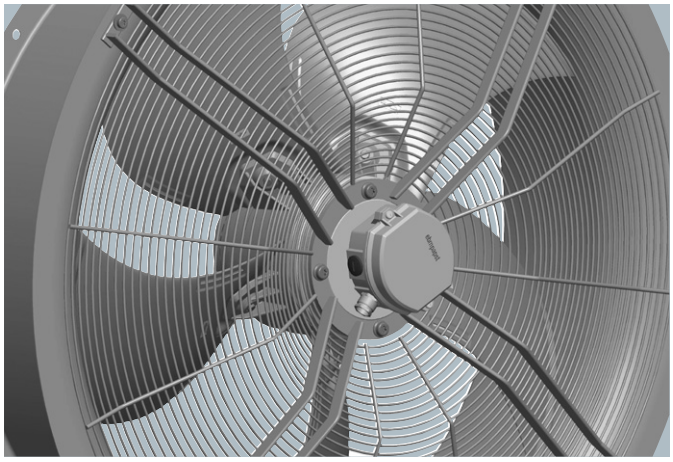

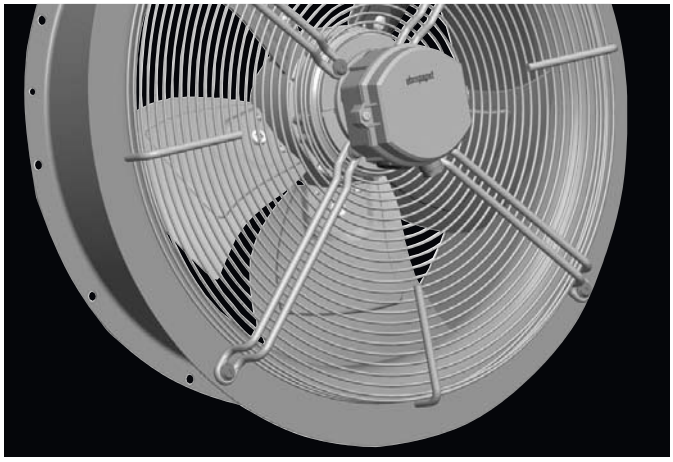

Technical parameters & scope

High standards for all ebm-papst products

Here at ebm-papst, we constantly strive to further improve our products in order to be able to offer you the best possible product for your application. Careful monitoring of the market ensures that technical innovations are reflected in the improvements of our products. Based on the technical parameters listed below and the ambience you want our product to operate in, we here at ebm-papst can always work out the best solution for your specific application.

General performance parameters

Any deviations from the technical data and parameters described here are listed on the product-specific data sheet.

Operating mode

If no other operating mode is specified on the product-specific data sheet, the operating mode is taken to be continuous operation (S1).

Insulation class (acc. to EN 60335)

On principle, our products comply with insulation class F.
Products with other insulation class are especially marked in the product-specific data sheets.

Protection class

In general, our products comply with protection class I (acc. to EN 50178 and EN 60335-1). Products with other protection class are specially indicated in the product-specific data sheets.

Type of protection

The type of protection applying to each product (according to DIN EN 60034-5) depends on the mounting position and is listed together with the relevant mounting position in the product-specific data sheet.

Drilled condensate discharges / mounting position

Condensate discharges are drilled depending on the mounting position. The product-specific data sheets provide information on this.
Please make sure that the drilled condensate discharges are not obstructed or closed.
Transformer fans for forced cooling of oil radiators are conventionally mounted with the air flowing in either horizontal or vertical (blowing upwards) direction. This is why a drilled condensate discharge is provided for in the stator flange.

Service life

The service life of ebm-papst products depends on two major factors:
- the service life of the insulation system
- the service life of the bearing system

The service life of the insulation system mainly depends on voltage level, temperature and ambient conditions, such as humidity and condensation.
The service life of the bearing system depends mainly on the thermal load on the bearing.
The majority of our products use maintenance-free ball bearings for any mounting position possible.
The service life L10 of the ball bearings can be taken as ca. 40,000 operating hours at an ambient temperature of 40 °C, yet this estimate can vary according to the actual ambient conditions.
We gladly provide you with a lifetime calculation taking into account your specific operating conditions.

Thermal protection / motor protection

Our ebm-papst motors for transformer cooling are protected in accordance with the relevant directives.
AC fans feature thermal overload protection. The user is asked to undertake the proper action to read this T.O.P. and to make sure the fans are disconnected from the mains in case an alarm is given.
With EC fans, the motor is thermally protected as well, including electronic reading and assessing, and the electronics are protected via current limiter.

Measuring station

Sound power level

All acoustic data is established in keeping with DIN 45635 and ISO 3744/3745 to accuracy class 2 and given as A-weighted. To measure sound power level Lw 10 microphones are distributed on an enveloping surface on the suction side of the fan under test (measuring set-up as per DIN 45635 T38).

Measuring conditions

ebm-papst products are measured under the following terms and conditions:

- axial fans in the wall ring and without guard grille
- Depending on the mounting situation, there can be deviations from the characteristics as specified.

Direction of air flow

The direction of air flow is given as follows:

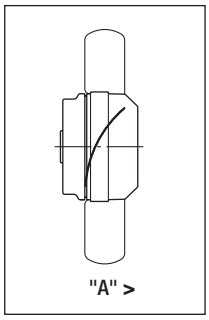

Direction of air flow "A"

System of units

All technical figures are given in SI units.

Left: Climate cabinet
Right: Salt spray test equipment

Mechanical strain / performance parameters

All ebm-papst products are subjected to comprehensive tests complying with the normative specifications. In addition to this, the tests also reflect the vast experience and expertise of ebm-papst.

Vibration test

Vibration tests are carried out in compliance with

- vibration test in operation according to DIN IEC 68, parts 2-4
- vibration test at standstill according to DIN IEC 68, parts 2-4

Shock load

Shock load tests are carried out in compliance with

- shock load according to DIN IEC 68, parts 2-27

Balancing quality

Testing the balancing quality is carried out in compliance with

- residual imbalance according to DIN ISO 1940
- standard balancing quality level G 6.3 (corresponding to 30 g x mm/kg)

Should you require a higher balancing quality level for your specific application, please let us know and specify this when ordering your product.

Chemo-physical strain / performance parameters

For information on chemo-physical strain, please turn to our brochure „Protecting fans against water and the elements“:

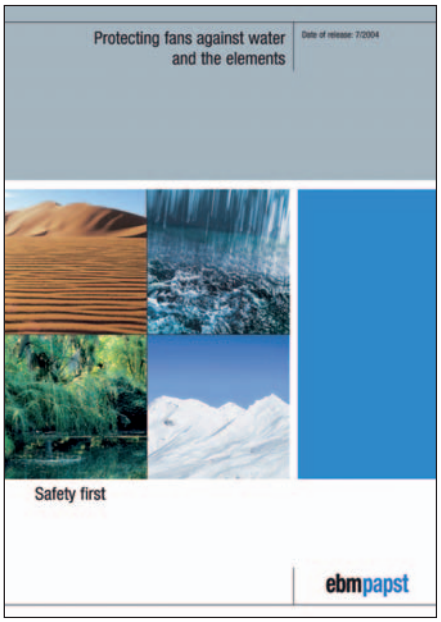

Part no. 37685-7-8811

Left: Extended-time test room
Middle: Shock test
Right: Condensate water test


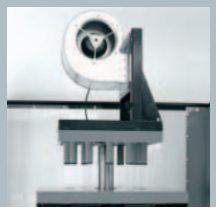
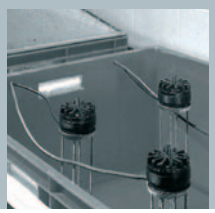

Legal and normative directives

The products described in this catalogue are designed, developed and produced in keeping with the standards in place for the relevant product and , if known, the conditions governing the relevant fields of application.

Standards

The AC products described here comply to EN 60034-1.
EC products are in keeping with the applicable specific standard.

EMC

In general, our EC products comply with the following EMC standards:
- interference emission EN 61000-6-3
- interference immunity EN 61000-6-2
- harmonics EN 61000-3-2/3

Wherever other standards apply, this is indicated in the data sheets.
Complying with the EMC standards has to be established on the final appliance, as different mounting situations can result in modified and changed EMC properties.

Leakage current

< 3.5 mA acc. to EN 60950-1
Measuring according to fig. D.1 corresponding to IEC 60990 fig. 4

Approvals

In case you require a specific approval for your ebm-papst product (VDE, UL, GOST, CCC, CSA, etc. please let us know.
Most of our products can be supplied with the relevant approval.
For further and more detailed information on the specific approvals, simply turn to the data sheets of the respective products.

AC transformer fans

Ø 450, 50 Hz

- **Material:** Guard grille made of steel, zinc-plated and plastic coated, RAL 9006
  Wall ring made of sheet steel, hot-dip galvanised and plastic coated, RAL 9006
  Screwed on fan blades made of sheet aluminium, varnished, RAL 9005
  Asynchronous external-rotor motor made of die-cast aluminium, varnished, RAL 9005
  Terminal box made of die-cast aluminium, varnished, RAL 9005
- **Direction of air flow:** "A"
- **Direction of rotation:** clockwise, seen on rotor
- **Type of protection:** IP 54 (according to EN 60529)
- **Insulation class:** "F"
- **Mounting position:** shaft horizontal or rotor on top
- **Condensate discharges:** in the stator flange
- **Operating mode:** Continuous operation (S1)
- **Bearings:** Maintenance-free ball bearings

Nominal data		Blade angle	Characteristic	Nominal voltage	Frequency	Air flow	Speed/rpm	Power input	Start-up current	Current draw	Max. back pressure	Perm. amb. temp.	Mass
Type	**Motor**			**VAC**	**Hz**	**m³/h**	**min⁻¹**	**W**	**A**	**A**	**Pa**	**°C**	**kg**
W4D 450	M4D110-EF	0°	A	400 Δ	50	7210	1380	410	3,40	0,90	115	-40..+95	13,5
			B	400 Y	50	6070	1150	295	1,20	0,50	75	-40..+95	

subject to alterations

Characteristics

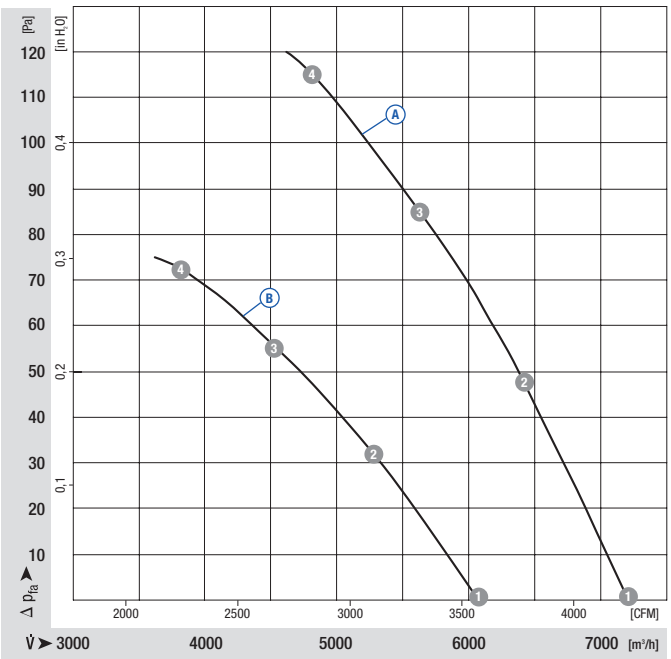

		n [min⁻¹]	P_1 [W]	I [A]	Lw_A [dB(A)]
A	1	1380	410	0,90	76
A	2	1365	450	0,97	76
A	3	1355	475	0,99	77
A	4	1350	490	1,02	79
B	1	1150	295	0,50	72
B	2	1120	320	0,56	71
B	3	1090	335	0,58	73
B	4	1075	340	0,59	75

ebmpapst

- **Motor protection:** TOP brought out (on terminal strip)
- **Cable exit:** lateral via terminal box
- **Protection class:** I (according to EN 61800-5-1)
- **Product conforming to standard:** CE
- **Approvals:** VDE (according to EN 60034)

Selection	Direction of air flow	Blade angle	
Type			
W4D450	"A"	0°	W4D450-CG01 -80

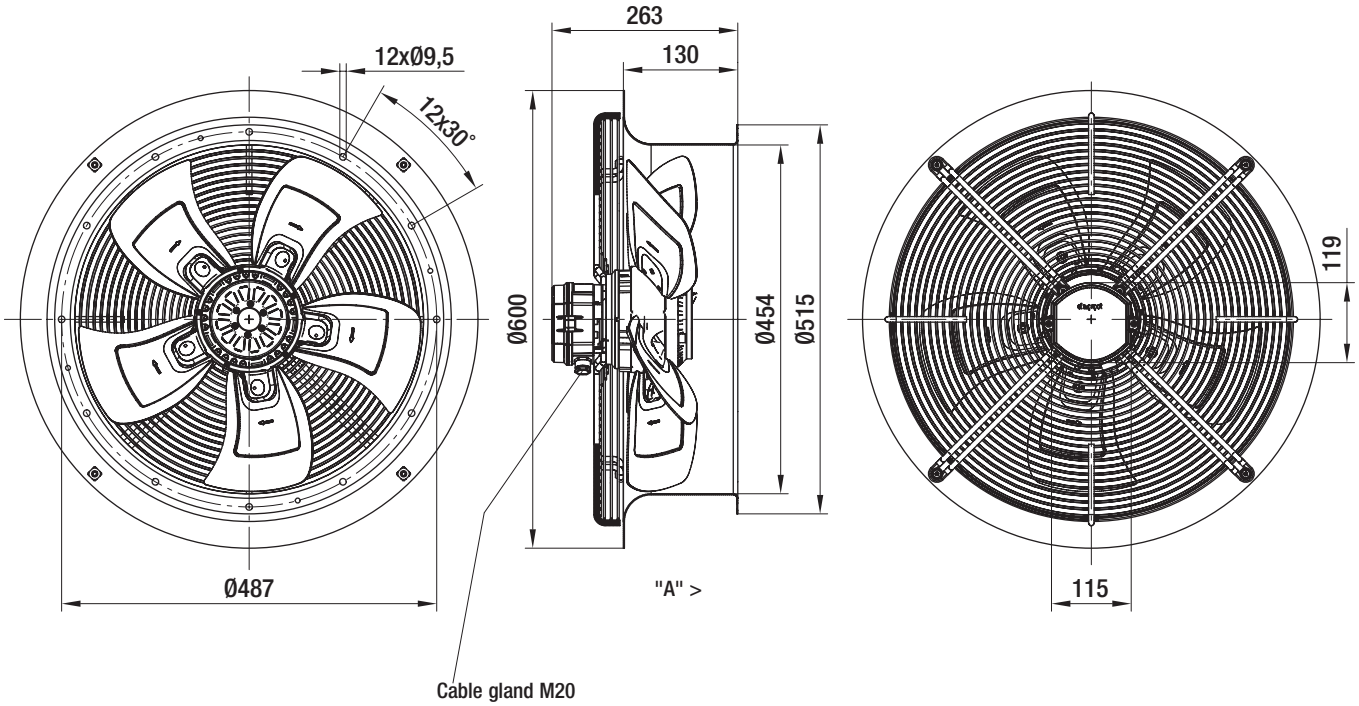

AC transformer fans

Ø 450, 60 Hz

- **Material:** Guard grille made of steel, zinc-plated and plastic coated, RAL 9006
  Wall ring made of sheet steel, hot-dip galvanised and plastic coated, RAL 9006
  Screwed on fan blades made of sheet aluminium, varnished, RAL 9005
  Asynchronous external-rotor motor made of die-cast aluminium, varnished, RAL 9005
  Terminal box made of die-cast aluminium, varnished, RAL 9005
- **Direction of air flow:** "A"
- **Direction of rotation:** clockwise, seen on rotor
- **Type of protection:** IP 54 (according to EN 60529)
- **Insulation class:** "F"
- **Mounting position:** shaft horizontal or rotor on top
- **Condensate discharges:** in the stator flange
- **Operating mode:** Continuous operation (S1)
- **Bearings:** Maintenance-free ball bearings

Nominal data		Blade angle	Characteristic	Nominal voltage	Frequency	Air flow	Speed/rpm	Power input	Start-up current	Current draw	Max. back pressure	Perm. amb. temp.	Mass
Type	**Motor**			**VAC**	**Hz**	**m³/h**	**min⁻¹**	**W**	**A**	**A**	**Pa**	**°C**	**kg**
W4D 450	M4D110-EF	0°	A	480 Δ	60	8490	1620	640	4,00	1,03	155	-40..+60	13,5
			B	480 Y	60	6800	1305	460	1,30	0,64	90	-40..+60	

subject to alterations

Characteristics

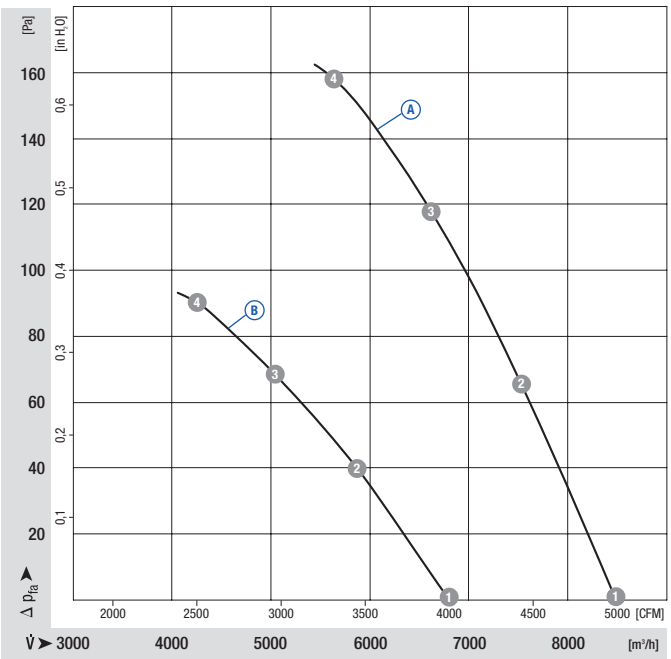

		n [min⁻¹]	P_1 [W]	I [A]	Lw_A [dB(A)]
A	1	1620	640	1,03	80
A	2	1600	730	1,12	80
A	3	1585	770	1,17	82
A	4	1575	800	1,19	82
B	1	1305	460	0,64	75
B	2	1250	495	0,69	74
B	3	1215	505	0,71	76
B	4	1195	515	0,72	76

ebmpapst

- **Motor protection:** TOP brought out (on terminal strip)
- **Cable exit:** lateral via terminal box
- **Protection class:** I (according to EN 61800-5-1)
- **Product conforming to standard:** CE
- **Approvals:** VDE (according to EN 60034)

Selection	Direction of air flow	Blade angle	
Type			
W4D450	"A"	0°	W4D450-CG01 -80

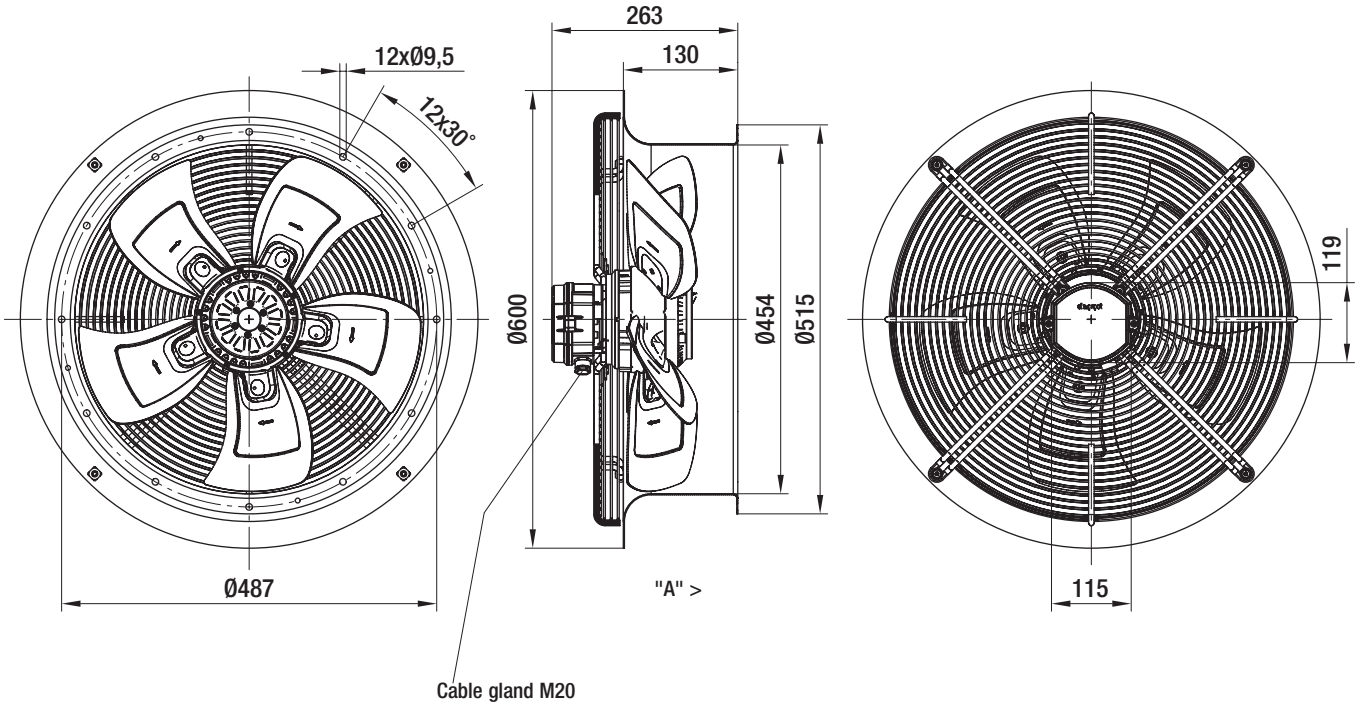

AC transformer fans

Ø 500, 50 Hz

- **Material:** Guard grille made of steel, zinc-plated and plastic coated, RAL 9006
  Wall ring made of sheet steel, hot-dip galvanised and plastic coated, RAL 9006
  Screwed on fan blades made of sheet aluminium, varnished, RAL 9005
  Asynchronous external-rotor motor made of die-cast aluminium, varnished, RAL 9005
  Terminal box made of die-cast aluminium, varnished, RAL 9005
- **Direction of air flow:** "A"
- **Direction of rotation:** clockwise, seen on rotor
- **Type of protection:** IP 54 (according to EN 60529)
- **Insulation class:** "F"
- **Mounting position:** shaft horizontal or rotor on top
- **Condensate discharges:** in the stator flange
- **Operating mode:** Continuous operation (S1)
- **Bearings:** Maintenance-free ball bearings

Nominal data		Blade angle	Characteristic	Nominal voltage	Frequency	Air flow	Speed/rpm	Power input	Start-up current	Current draw	Max. back pressure	Perm. amb. temp.	Mass
Type	**Motor**			**VAC**	**Hz**	**m³/h**	**min⁻¹**	**W**	**A**	**A**	**Pa**	**°C**	**kg**
W4D500	M4D110-GF	0°	A	400 Δ	50	9590	1380	620	5,80	1,30	160	-40..+80	17,1
			B	400 Y	50	8120	1160	455	2,00	0,77	100	-40..+80	
W6D500	M6D110-EF	0°	C	400 Δ	50	6640	945	255	2,55	0,72	75	-40..+75	15,1
			D	400 Y	50	5780	825	185	0,85	0,32	50	-40..+75	
W8D500	M8D110-EF	0°	E	400 Δ	50	5030	715	180	----	0,60	45	-40..+70	15,1
			F	400 Y	50	4600	650	100	----	0,21	34	-40..+70	

subject to alterations

Characteristics

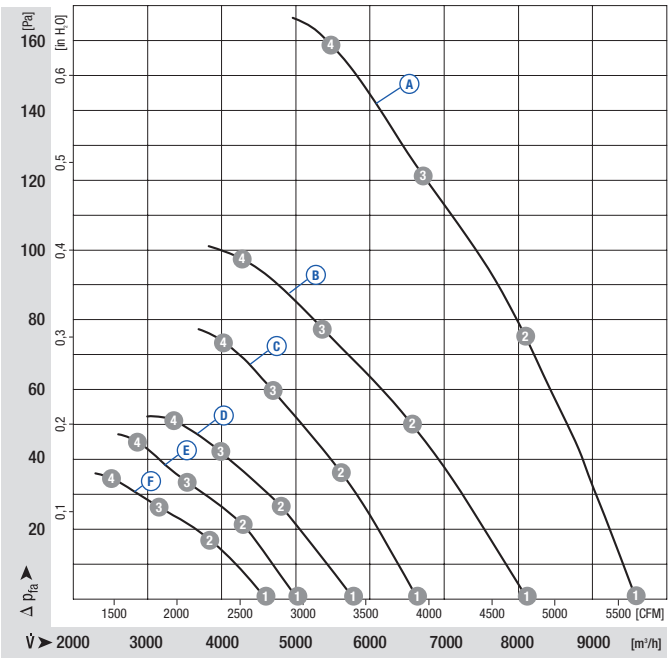

		n [min⁻¹]	P_1 [W]	I [A]	Lw_A [dB(A)]
A	1	1380	620	1,30	77
A	2	1355	705	1,39	77
A	3	1345	755	1,44	78
A	4	1325	815	1,52	80
B	1	1160	455	0,77	73
B	2	1100	500	0,84	73
B	3	1070	520	0,87	72
B	4	1040	540	0,91	74
C	1	945	255	0,72	69
C	2	940	285	0,75	70
C	3	930	300	0,76	70
C	4	925	315	0,76	71
D	1	825	185	0,32	66
D	2	800	200	0,36	67
D	3	780	215	0,37	66
D	4	770	225	0,39	67
E	1	715	180	0,60	63
E	2	710	190	0,64	64
E	3	710	200	0,63	62
E	4	700	210	0,61	65
F	1	650	100	0,21	61
F	2	640	110	0,23	61
F	3	630	115	0,24	60
F	4	615	120	0,25	61

ebmpapst

- **Motor protection:** TOP brought out (on terminal strip)
- **Cable exit:** lateral via terminal box
- **Protection class:** I (according to EN 61800-5-1)
- **Product conforming to standard:** CE
- **Approvals:** VDE (according to EN 60034)

Selection	Direction of air flow	Blade angle	
Type			
W4D500	"A"	0°	W4D500-CD03 -80
W6D500	"A"	0°	W6D500-CG03 -80
W8D500	"A"	0°	W8D500-CG01 -80

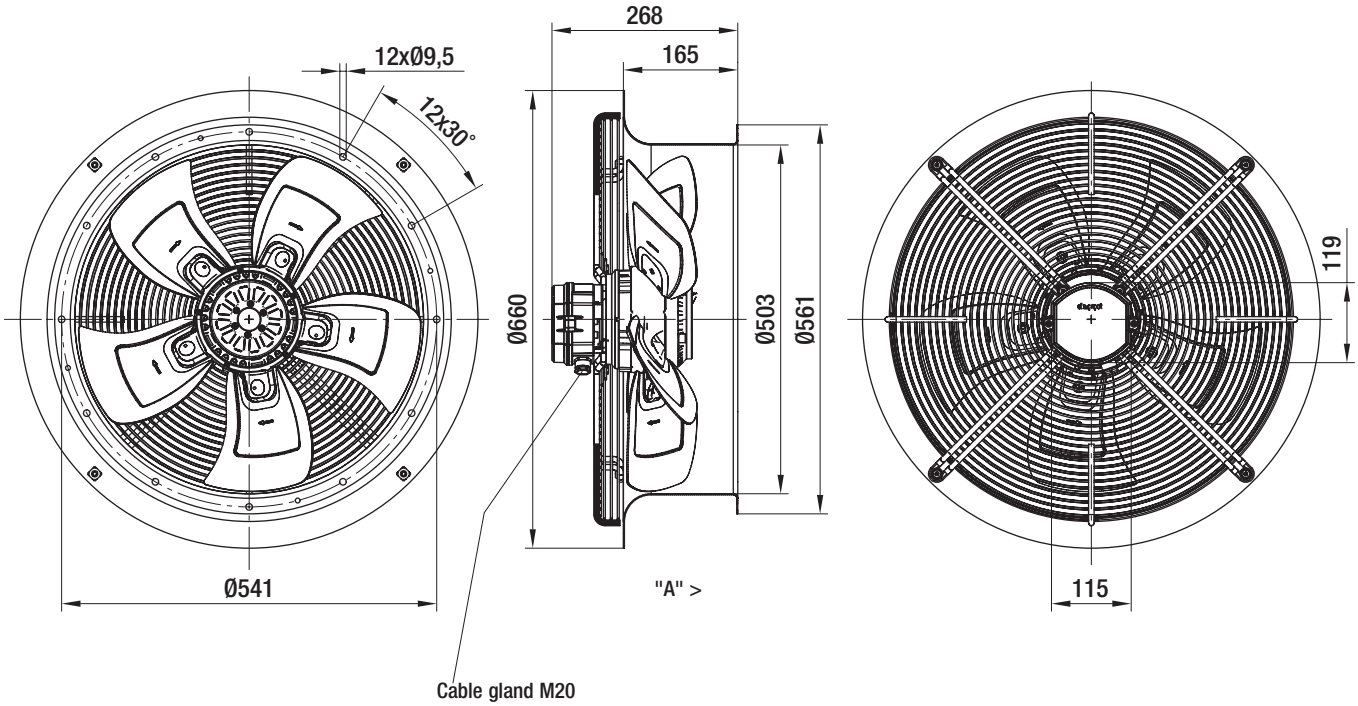

AC transformer fans

Ø 500, 60 Hz

- **Material:** Guard grille made of steel, zinc-plated and plastic coated, RAL 9006
  Wall ring made of sheet steel, hot-dip galvanised and plastic coated, RAL 9006
  Screwed on fan blades made of sheet aluminium, varnished, RAL 9005
  Asynchronous external-rotor motor made of die-cast aluminium, varnished, RAL 9005
  Terminal box made of die-cast aluminium, varnished, RAL 9005
- **Direction of air flow:** "A"
- **Direction of rotation:** clockwise, seen on rotor
- **Type of protection:** IP 54 (according to EN 60529)
- **Insulation class:** "F"
- **Mounting position:** shaft horizontal or rotor on top
- **Condensate discharges:** in the stator flange
- **Operating mode:** Continuous operation (S1)
- **Bearings:** Maintenance-free ball bearings

Nominal data

Type	Motor	Blade angle	Characteristic	Nominal voltage	Frequency	Air flow	Speed/rpm	Power input	Start-up current	Current draw	Max. back pressure	Perm. amb. temp.	Mass
				VAC	Hz	m³/h	min⁻¹	W	A	A	Pa	°C	kg
W4D500	M4D110-GF	0°	A	480 Δ	60	11300	1620	1000	6,50	1,55	150	-40..+50	17,1
			B	480 Y	60	8970	1280	695	2,20	0,98	84	-40..+50	
W6D500	M6D110-EF	0°	C	480 Δ	60	7840	1115	400	----	0,76	100	-40..+60	15,1
			D	480 Y	60	6760	950	290	----	0,42	60	-40..+60	
W8D500	M8D110-EF	0°	E	480 Δ	60	6000	850	245	----	0,63	65	-40..+65	15,1
			F	480 Y	60	5360	760	150	----	0,25	45	-40..+65	

subject to alterations

Characteristics

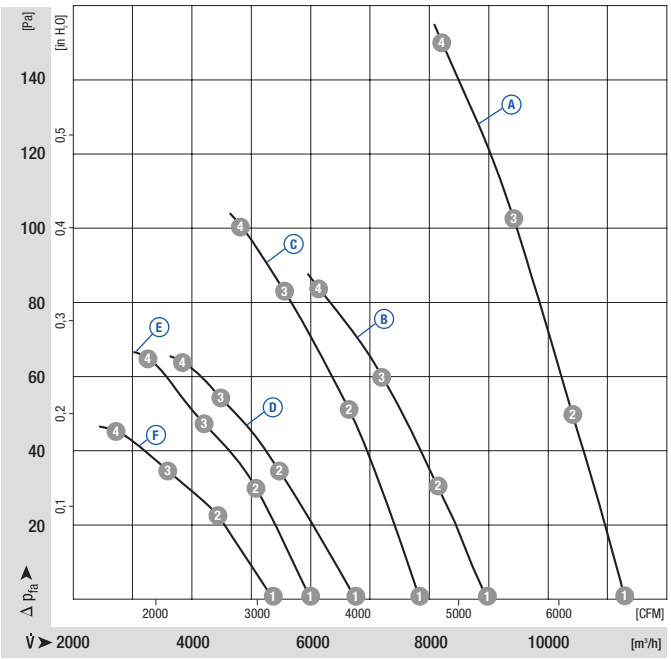

		n [min⁻¹]	P_1 [W]	I [A]	Lw_A [dB(A)]
A	1	1620	1000	1,55	80
A	2	1605	1070	1,70	80
A	3	1590	1145	1,80	80
A	4	1570	1210	1,87	81
B	1	1280	695	0,98	75
B	2	1250	725	1,04	75
B	3	1210	750	1,08	75
B	4	1170	770	1,11	74
C	1	1115	400	0,76	73
C	2	1105	445	0,79	74
C	3	1095	470	0,82	74
C	4	1090	490	0,83	75
D	1	950	290	0,42	69
D	2	910	315	0,46	70
D	3	885	330	0,48	69
D	4	865	345	0,50	70
E	1	850	245	0,63	67
E	2	845	265	0,66	67
E	3	840	280	0,66	67
E	4	830	300	0,65	70
F	1	760	150	0,25	64
F	2	735	170	0,28	64
F	3	720	180	0,29	63
F	4	700	190	0,30	65

ebmpapst

- **Motor protection:** TOP brought out (on terminal strip)
- **Cable exit:** lateral via terminal box
- **Protection class:** I (according to EN 61800-5-1)
- **Product conforming to standard:** CE
- **Approvals:** VDE (according to EN 60034)

Selection	Direction of air flow	Blade angle	
Type			
W4D500	"A"	0°	W4D500-CD03 -80
W6D500	"A"	0°	W6D500-CG03 -80
W8D500	"A"	0°	W8D500-CG01 -80

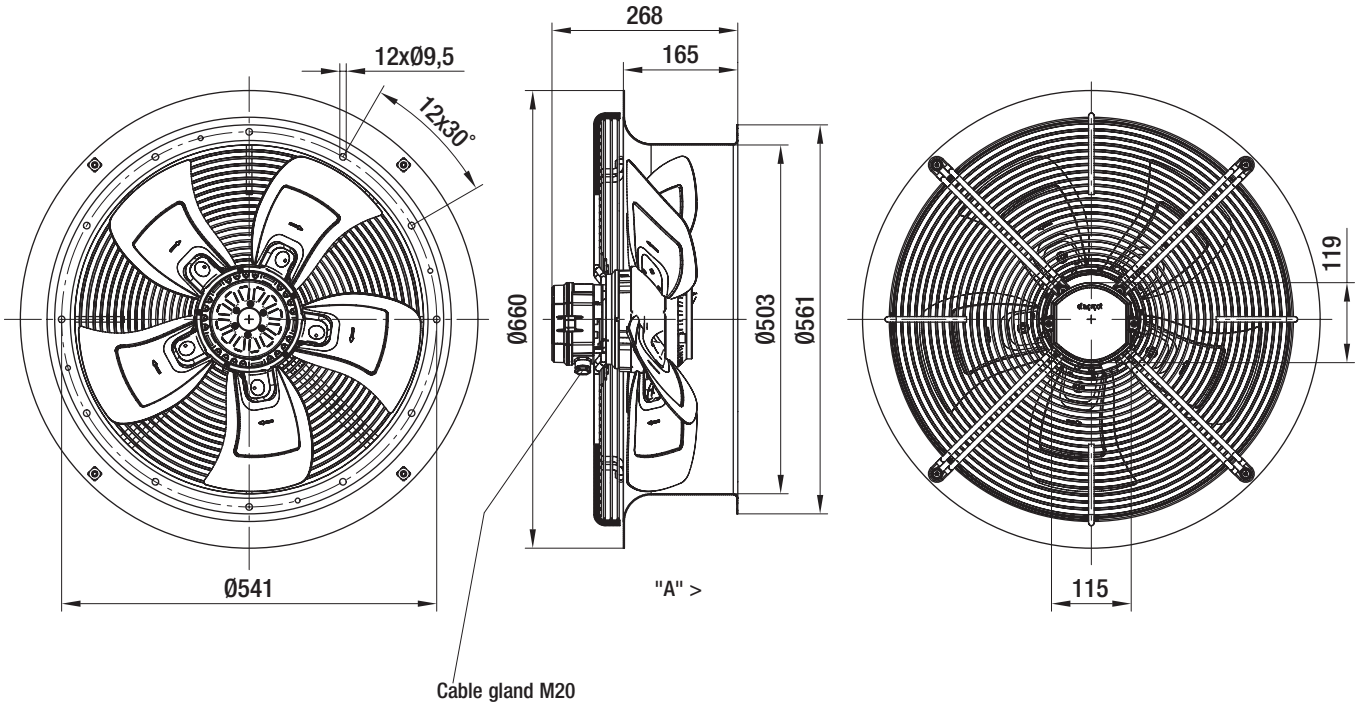

AC transformer fans

Ø 630, 50 Hz

- **Material:** Guard grille made of steel, zinc-plated and plastic coated, RAL 9006
  Wall ring made of sheet steel, hot-dip galvanised and plastic coated, RAL 9006
  Screwed on fan blades made of sheet aluminium, varnished, RAL 9005
  Asynchronous external-rotor motor made of die-cast aluminium, varnished, RAL 9005
  Terminal box made of die-cast aluminium, varnished, RAL 9005
- **Direction of air flow:** "A"
- **Direction of rotation:** clockwise, seen on rotor
- **Type of protection:** IP 54 (according to EN 60529)
- **Insulation class:** "F"
- **Mounting position:** shaft horizontal or rotor on top
- **Condensate discharges:** in the stator flange
- **Operating mode:** Continuous operation (S1)
- **Bearings:** Maintenance-free ball bearings

Nominal data

Type	Motor	Blade angle	Characteristic	Nominal voltage	Frequency	Air flow	Speed/rpm	Power input	Start-up current	Current draw	Max. back pressure	Perm. amb. temp.	Mass
				VAC	Hz	m³/h	min⁻¹	W	A	A	Pa	°C	kg
W6D630	M6D110-IA	0°	A	400 Δ	50	12850	925	610	4,30	1,45	110	-40..+60	21,8
			B	400 Y	50	10750	770	440	1,45	0,80	65	-40..+60	
W8D630	M8D110-GF	0°	C	400 Δ	50	9285	675	300	1,90	0,82	62	-40..+65	19,5
			D	400 Y	50	7280	525	180	0,60	0,37	30	-40..+65	

subject to alterations

Characteristics

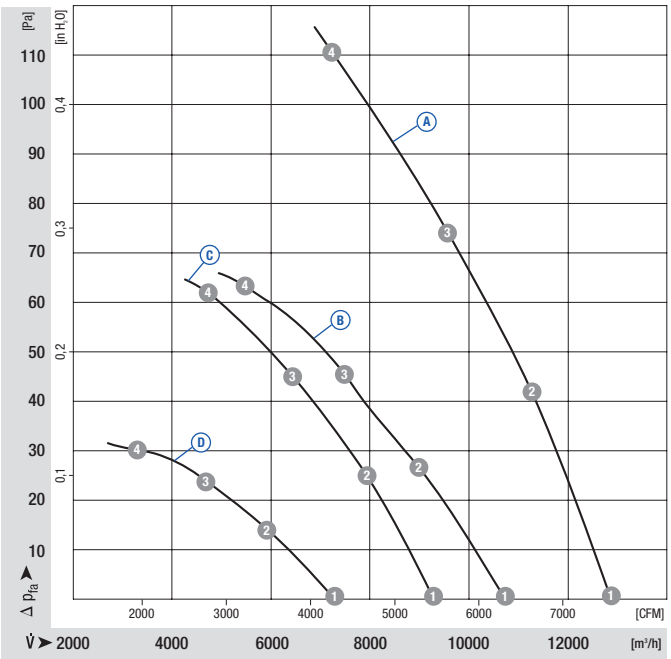

		n [min⁻¹]	P_1 [W]	I [A]	Lw_A [dB(A)]
A	1	925	610	1,45	77
A	2	915	670	1,48	75
A	3	910	720	1,54	76
A	4	895	790	1,60	76
B	1	770	440	0,80	73
B	2	735	470	0,83	71
B	3	710	490	0,86	71
B	4	675	520	0,91	70
C	1	675	300	0,82	71
C	2	660	330	0,84	69
C	3	655	350	0,85	69
C	4	640	380	0,91	69
D	1	525	180	0,37	65
D	2	495	195	0,40	63
D	3	475	200	0,41	62
D	4	440	210	0,42	61

ebmpapst

- **Motor protection:** TOP brought out (on terminal strip)
- **Cable exit:** lateral via terminal box
- **Protection class:** I (according to EN 61800-5-1)
- **Product conforming to standard:** CE
- **Approvals:** VDE (according to EN 60034)

Selection	Direction of air flow	Blade angle	
Type			
W6D630	"A"	0°	W6D630-CA01 -80
W8D630	"A"	0°	W8D630-CD01 -80

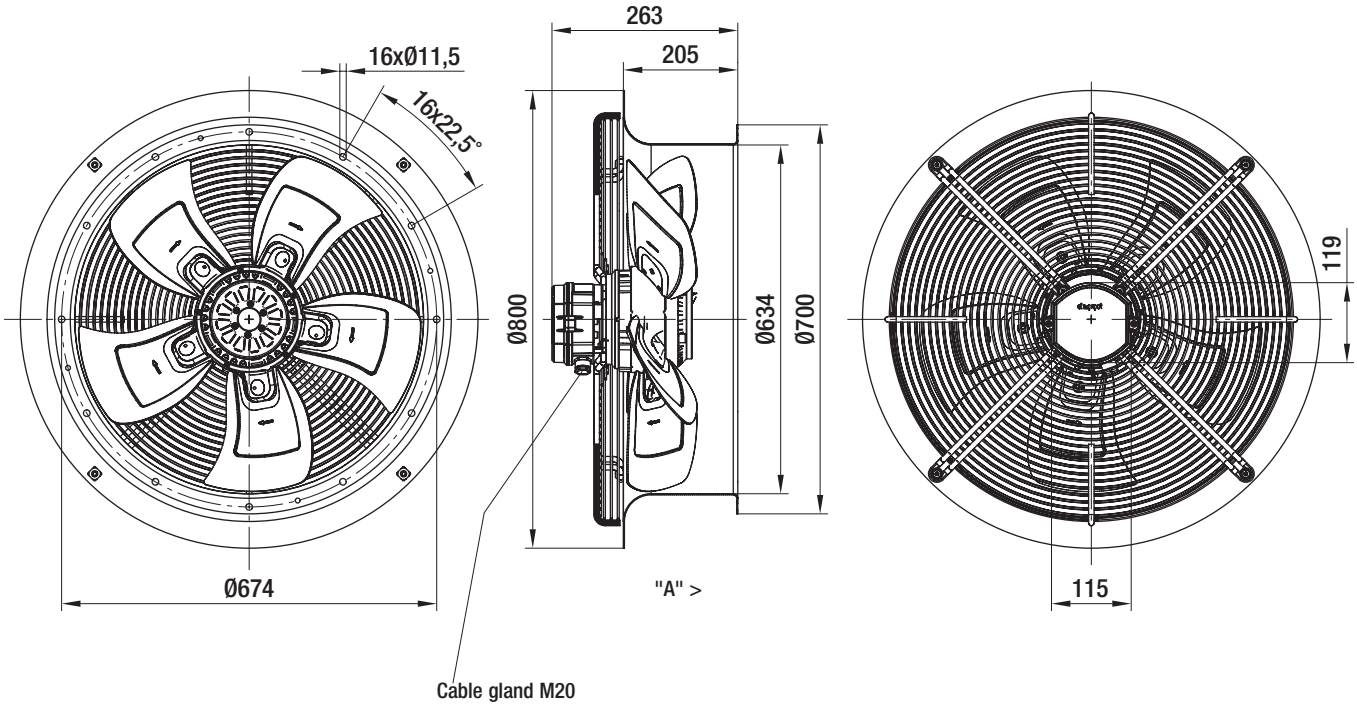

AC transformer fans

Ø 800, 50 Hz

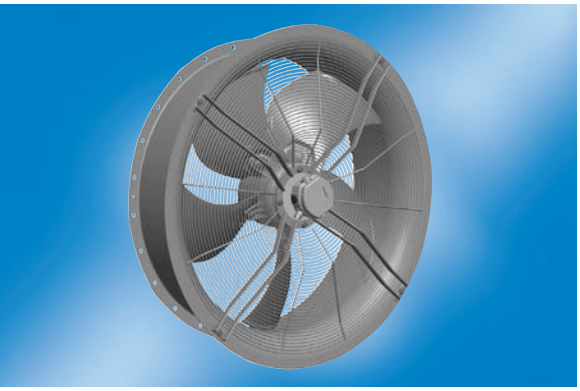

- **Material:** Guard grille made of steel, zinc-plated and plastic coated, RAL 9006
  Wall ring made of sheet steel, hot-dip galvanised and plastic coated, RAL 9006
  Screwed on fan blades made of die-cast aluminium, varnished, RAL 9005
  Asynchronous external-rotor motor made of die-cast aluminium, varnished, RAL 9005
  Terminal box made of die-cast aluminium, varnished, RAL 9005
- **Direction of air flow:** "A"
- **Direction of rotation:** counter-clockwise, seen on rotor
- **Type of protection:** IP 54 (according to EN 60529)
- **Insulation class:** "F"
- **Mounting position:** shaft horizontal or rotor on top
- **Condensate discharges:** in the stator flange
- **Operating mode:** Continuous operation (S1)
- **Bearings:** Maintenance-free ball bearings

Nominal data

Type	Motor	Blade angle	Characteristic	Nominal voltage	Frequency	Air flow	Speed/rpm	Power input	Start-up current	Current draw	Max. back pressure	Perm. amb. temp.	Mass
				VAC	Hz	m³/h	min⁻¹	W	A	A	Pa	°C	kg
W6D800	M6D138-LA	0°	A	400 Δ	50	24780	930	1440	13,0	3,50	180	-40..+60	42,5
			B	400 Y	50	20780	785	1030	4,30	1,90	100	-40..+60	
W8D800	M8D138-LA	0°	C	400 Δ	50	18520	695	690	6,00	2,15	105	-40..+65	42,5
			D	400 Y	50	15520	585	465	2,00	0,99	57	-40..+65	
WZD800	MZD138-HF	0°	E	400 Δ	50	12050	460	290	2,40	1,06	44	-40..+80	38,5
			F	400 Y	50	10200	390	160	1,40	0,41	25	-40..+80	

subject to alterations

Characteristics

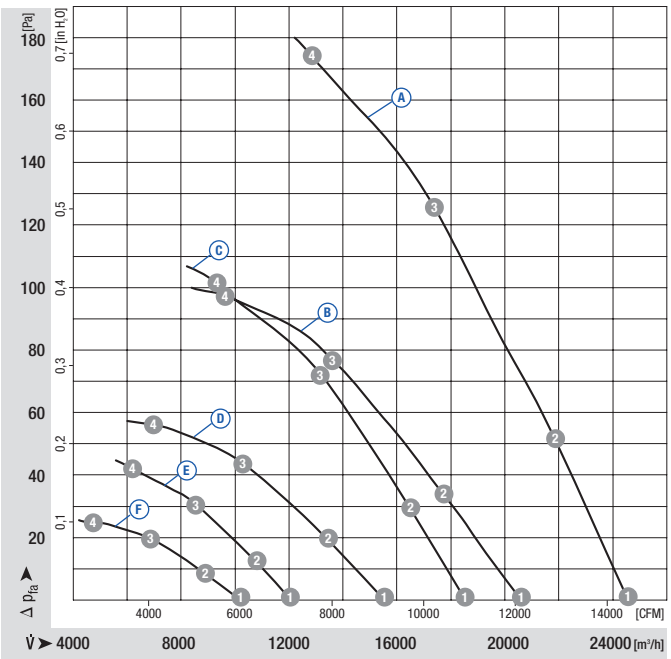

		n [min⁻¹]	P_1 [W]	I [A]	Lw_A [dB(A)]
A	1	930	1440	3,50	73
A	2	915	1555	3,48	71
A	3	900	1750	3,72	72
A	4	880	1980	4,05	78
B	1	785	1030	1,90	70
B	2	750	1075	2,02	68
B	3	705	1160	2,17	67
B	4	665	1225	2,30	72
C	1	695	690	2,15	68
C	2	690	760	2,21	67
C	3	680	850	2,28	67
C	4	660	960	2,40	71
D	1	585	465	0,99	64
D	2	560	505	1,06	63
D	3	530	540	1,13	62
D	4	500	570	1,20	64
E	1	460	290	1,06	60
E	2	455	310	1,09	59
E	3	445	335	1,10	58
E	4	440	360	1,12	61
F	1	390	160	0,41	56
F	2	375	175	0,43	55
F	3	360	185	0,45	55
F	4	340	195	0,46	55

ebmpapst

- **Motor protection:** TOP brought out (on terminal strip)
- **Cable exit:** lateral via terminal box
- **Protection class:** I (according to EN 61800-5-1)
- **Product conforming to standard:** CE
- **Approvals:** VDE (according to EN 60034)

Selection	Direction of air flow	Blade angle	
Type			
W6D800	"A"	0°	W6D800-CJ01 -80
W8D800	"A"	0°	W8D800-CJ01 -80
WZD800	"A"	0°	WZD800-CM03-80

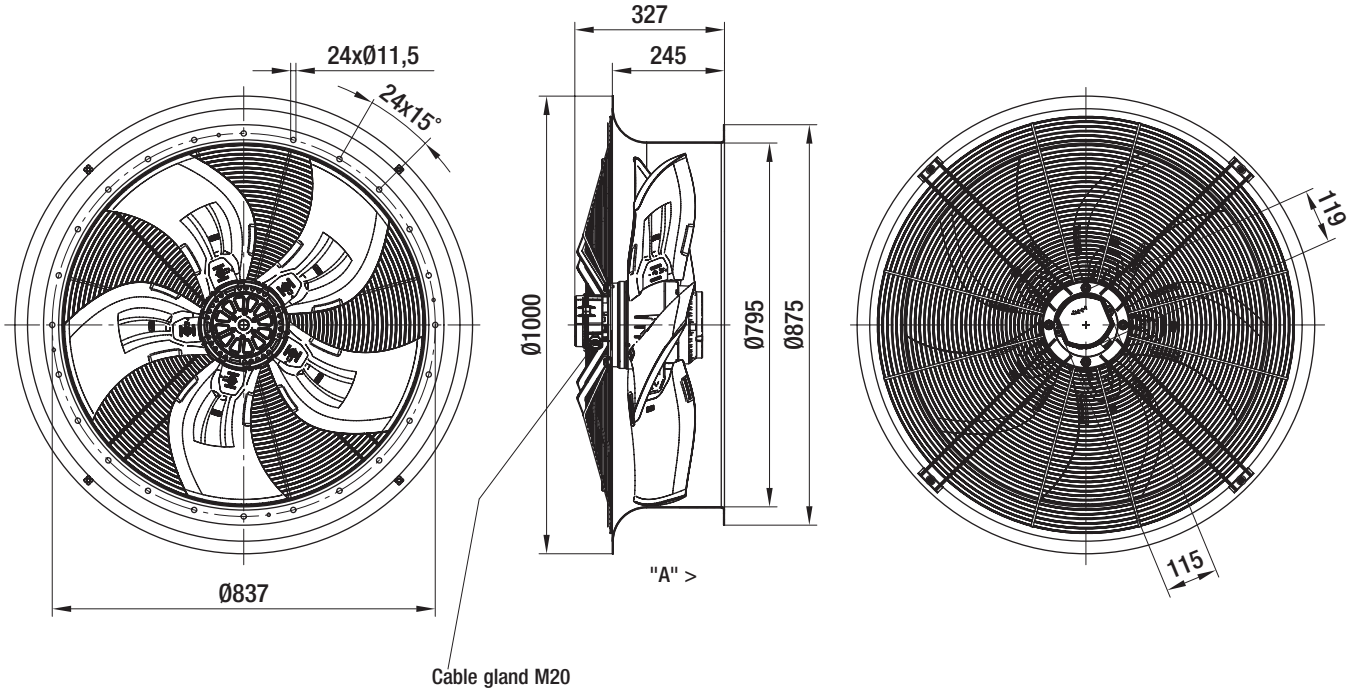

AC transformer fans

Ø 800, 60 Hz

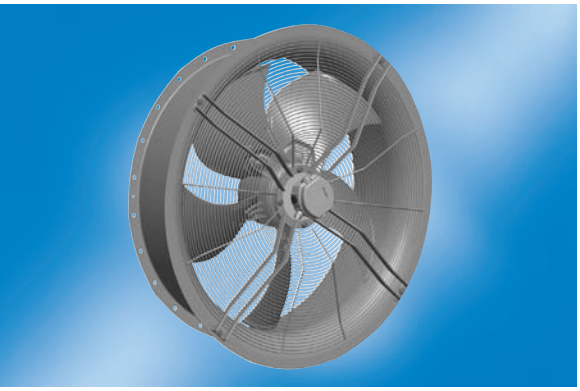

- **Material:** Guard grille made of steel, zinc-plated and plastic coated, RAL 9006
  Wall ring made of sheet steel, hot-dip galvanised and plastic coated, RAL 9006
  Screwed on fan blades made of die-cast aluminium, varnished, RAL 9005
  Asynchronous external-rotor motor made of die-cast aluminium, varnished, RAL 9005
  Terminal box made of die-cast aluminium, varnished, RAL 9005
- **Direction of air flow:** "A"
- **Direction of rotation:** counter-clockwise, seen on rotor
- **Type of protection:** IP 54 (according to EN 60529)
- **Insulation class:** "F"
- **Mounting position:** shaft horizontal or rotor on top
- **Condensate discharges:** in the stator flange
- **Operating mode:** Continuous operation (S1)
- **Bearings:** Maintenance-free ball bearings

Nominal data

Type	Motor	Blade angle	Characteristic	Nominal voltage	Frequency	Air flow	Speed/rpm	Power input	Start-up current	Current draw	Max. back pressure	Perm. amb. temp.	Mass
				VAC	Hz	m³/h	min⁻¹	W	A	A	Pa	°C	kg
W8D800	M8D138-LA	0°	A	480 Δ	60	21820	815	1070	6,60	2,33	65	-40..+60	42,5
			B	480 Y	60	16980	640	680	2,20	1,20	35	-40..+60	
WZD800	MZD138-HF	0°	C	480 Δ	60	14310	540	400	2,50	1,15	60	-40..+70	38,5
			D	480 Y	60	11490	440	230	1,45	0,47	30	-40..+70	

subject to alterations

Characteristics

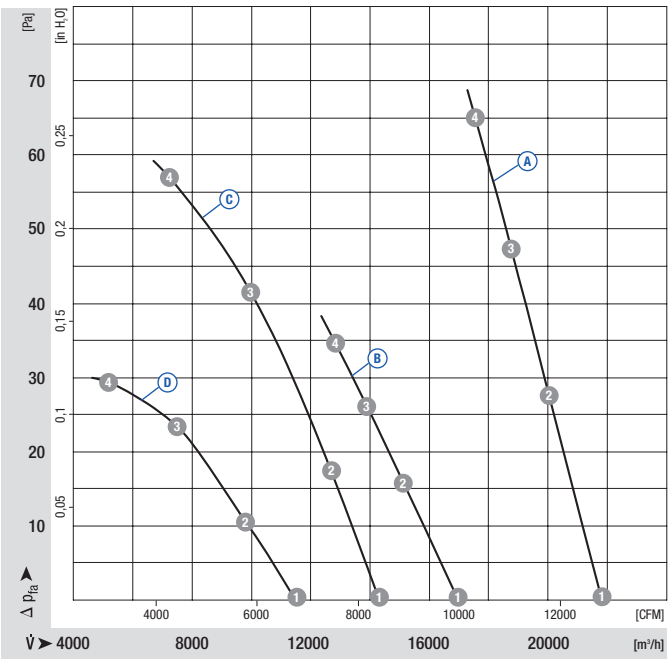

		n [min⁻¹]	P_1 [W]	I [A]	Lw_A [dB(A)]
A	1	815	1070	2,33	71
A	2	810	1160	2,42	70
A	3	800	1220	2,49	70
A	4	800	1260	2,57	70
B	1	640	680	1,20	66
B	2	615	710	1,25	65
B	3	595	725	1,28	64
B	4	585	735	1,30	64
C	1	540	400	1,15	64
C	2	535	440	1,17	62
C	3	520	480	1,20	62
C	4	510	525	1,23	65
D	1	440	230	0,47	59
D	2	415	250	0,50	57
D	3	390	260	0,52	56
D	4	370	270	0,53	57

ebmpapst

- **Motor protection:** TOP brought out (on terminal strip)
- **Cable exit:** lateral via terminal box
- **Protection class:** I (according to EN 61800-5-1)
- **Product conforming to standard:** CE
- **Approvals:** VDE (according to EN 60034)

Selection	Direction of air flow	Blade angle	
Type			
W8D800	"A"	0°	W8D800-CJ01 -80
WZD800	"A"	0°	WZD800-CM03-80

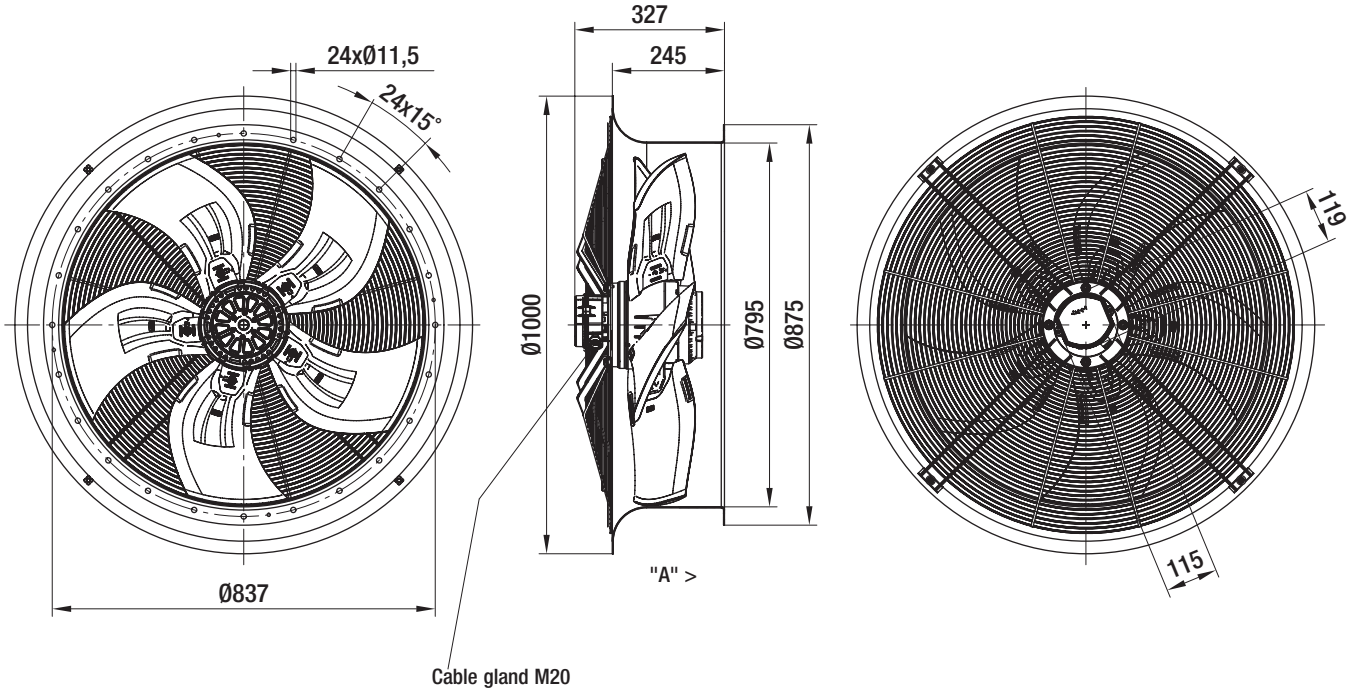

EC transformer fans

Ø 710

- **Material:** Guard grille made of steel, zinc-plated and plastic coated, RAL 9006
  Wall ring made of sheet steel, hot-dip galvanised and plastic coated, RAL 9006
  Screwed on fan blades made of die-cast aluminium, varnished, RAL 9005
  Stator and electronics housing made of die-cast aluminium, varnished, RAL 9005
  Rotor made of sheet steel, varnished, RAL 9005
- **Direction of air flow:** "A"
- **Direction of rotation:** counter-clockwise, seen on rotor
- **Type of protection:** IP 54 (according to EN 60529)
- **Insulation class:** "F"
- **Mounting position:** shaft horizontal or rotor on top
- **Condensate discharges:** in the stator flange
- **Operating mode:** Continuous operation (S1)
- **Bearings:** Maintenance-free ball bearings

Nominal data[1]		Blade angle	Characteristic	Voltage range	Frequency	Air flow	Speed/rpm	Power input	Current draw	Max. back pressure	Perm. amb. temp.	Mass
Type	**Motor**			**VAC**	**Hz**	**m³/h**	**min⁻¹**	**W**	**A**	**Pa**	**°C**	**kg**
W3G710	M3G150-IF	0°	A	380-480	50/60	23900	1240	1990	3,0	245	-40..+60	45,5

subject to alterations

[1] at 400 VAC

Characteristics

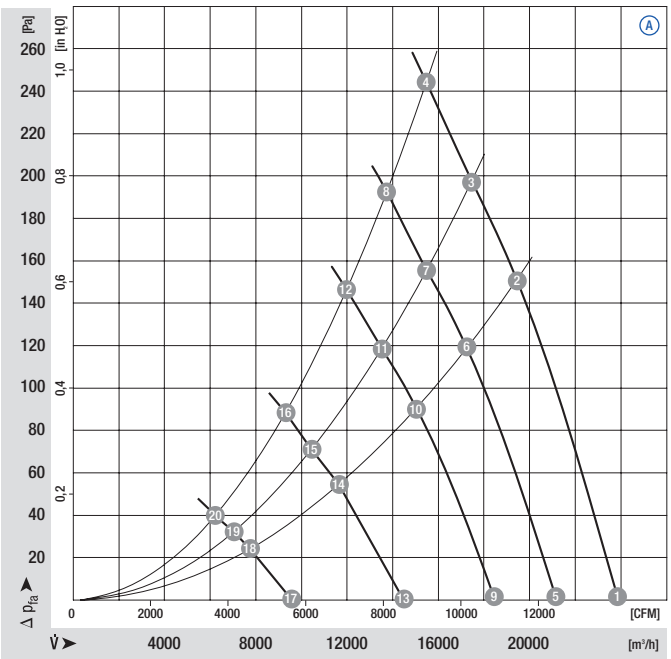

		n [min⁻¹]	P_1 [W]	I [A]	Lw_A [dB(A)]
A	1	1240	1990	3,00	80
A	2	1240	2470	3,75	80
A	3	1240	2590	3,90	81
A	4	1240	2700	4,10	84
A	5	1100	1390	2,10	77
A	6	1100	1720	2,60	77
A	7	1100	1810	2,75	79
A	8	1100	1890	2,85	82
A	9	960	920	1,40	74
A	10	960	1150	1,75	74
A	11	960	1200	1,80	76
A	12	960	1250	1,90	79
A	13	750	440	0,67	69
A	14	750	550	0,83	69
A	15	750	570	0,87	71
A	16	750	600	0,90	73
A	17	500	130	0,20	60
A	18	500	160	0,25	60
A	19	500	170	0,26	62
A	20	500	180	0,27	64

ebmpapst

- **Technical features:** control input 0-10 VDC / PWM, RS485 ebmBUS, alarm relay, integrated PID control, voltage supply for sensor, input for sensor 0-10 V respectively 4-20 mA, 0-10 V output for slave, PFC (passive), soft start, line undervoltage detection, phase failure detection
- **Motor protection:** motor current limitation, over-temperature protected electronics and motor, locked-rotor protection
- **Protection class:** I (according to EN 61800-5-1)
- **Product conforming to standardt:** CE
- **Approvals:** GOST, UL and VDE are applied for

Selection	Direction of air flow	Blade angle	
Type			
W3G710	"A"	0°	W3G710-CH06 -80

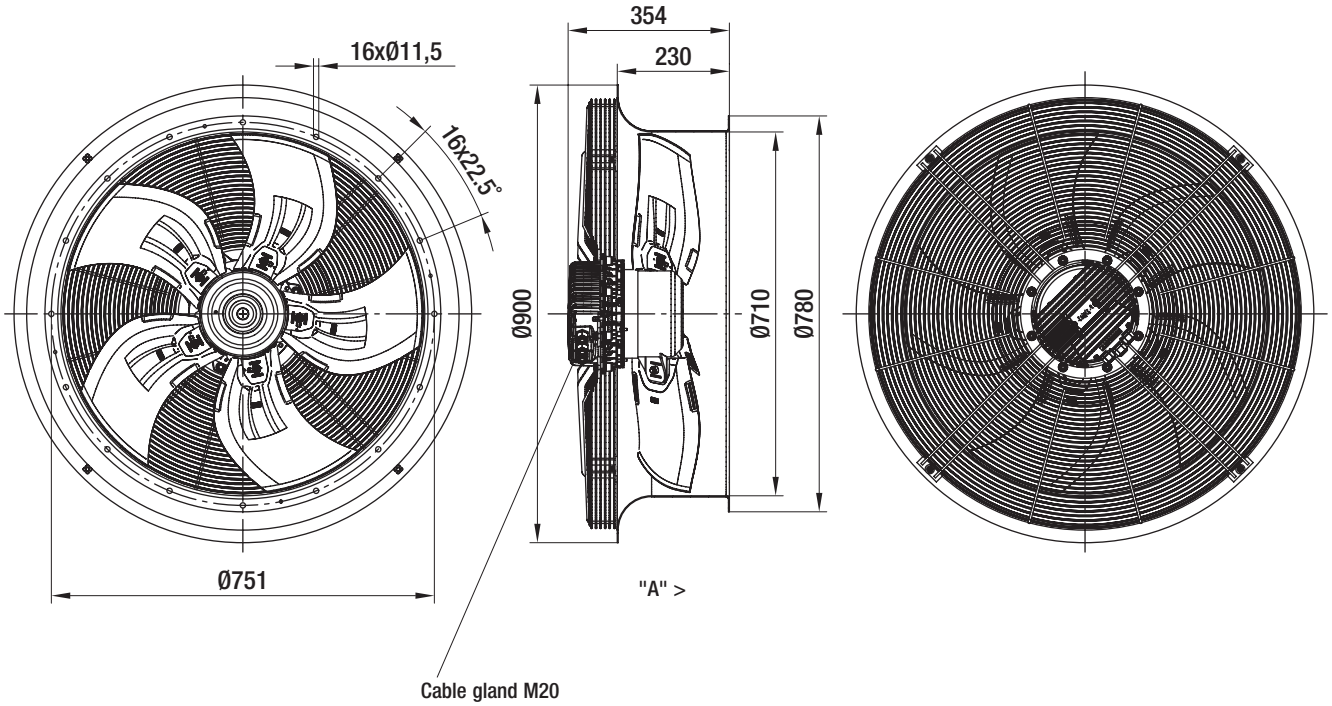

EC transformer fans

Ø 800

- **Material:** Guard grille made of steel, zinc-plated and plastic coated, RAL 9006
  Wall ring made of sheet steel, hot-dip galvanised and plastic coated, RAL 9006
  Screwed on fan blades made of die-cast aluminium, varnished, RAL 9005
  Stator and electronics housing made of die-cast aluminium, varnished, RAL 9005
  Rotor made of sheet steel, varnished, RAL 9005
- **Direction of air flow:** "A"
- **Direction of rotation:** counter-clockwise, seen on rotor
- **Type of protection:** IP 54 (according to EN 60529)
- **Insulation class:** "F"
- **Mounting position:** shaft horizontal or rotor on top
- **Condensate discharges:** in the stator flange
- **Operating mode:** Continuous operation (S1)
- **Bearings:** Maintenance-free ball bearings

Nominal data[1]		Blade angle	Characteristic	Voltage range	Frequency	Air flow	Speed/rpm	Power input	Current draw	Max. back pressure	Perm. amb. temp.	Mass
Type	**Motor**			**VAC**	**Hz**	**m³/h**	**min⁻¹**	**W**	**A**	**Pa**	**°C**	**kg**
W3G800	M3G150-IF	0°	A	380-480	50/60	25400	980	1370	2,1	220	-40..+60	49,5

subject to alterations

[1] at 400 VAC

Characteristics

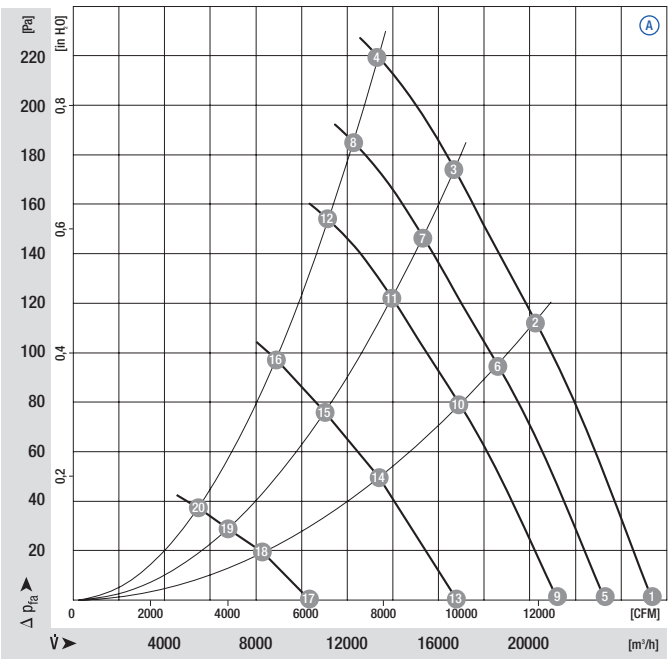

	n [min⁻¹]	P_1 [W]	I [A]	Lw_A [dB(A)]
A 1	980	1370	2,10	74
A 2	980	1760	2,70	73
A 3	980	1935	2,95	76
A 4	980	2210	3,40	82
A 5	900	1060	1,65	73
A 6	900	1365	2,10	72
A 7	900	1500	2,25	75
A 8	900	1715	2,60	80
A 9	820	800	1,25	71
A 10	820	1030	1,60	70
A 11	820	1135	1,70	73
A 12	820	1295	2,00	78
A 13	650	400	0,61	66
A 14	650	510	0,78	65
A 15	650	560	0,85	68
A 16	650	650	0,98	73
A 17	400	95	0,14	55
A 18	400	120	0,18	54
A 19	400	130	0,20	57
A 20	400	150	0,23	62

ebmpapst

- **Technical features:** control input 0-10 VDC / PWM, RS485 ebmBUS, alarm relay, integrated PID control, voltage supply for sensor, input for sensor 0-10 V respectively 4-20 mA, 0-10 V output for slave, PFC (passive), soft start, line undervoltage detection, phase failure detection
- **Motor protection:** motor current limitation, over-temperature protected electronics and motor, locked-rotor protection
- **Protection class:** I (according to EN 61800-5-1)
- **Product conforming to standard:** CE
- **Approvals:** GOST, UL and VDE are applied for

Selection	Direction of air flow	Blade angle	
Type			
W3G800	"A"	0°	W3G800-CH03 -80

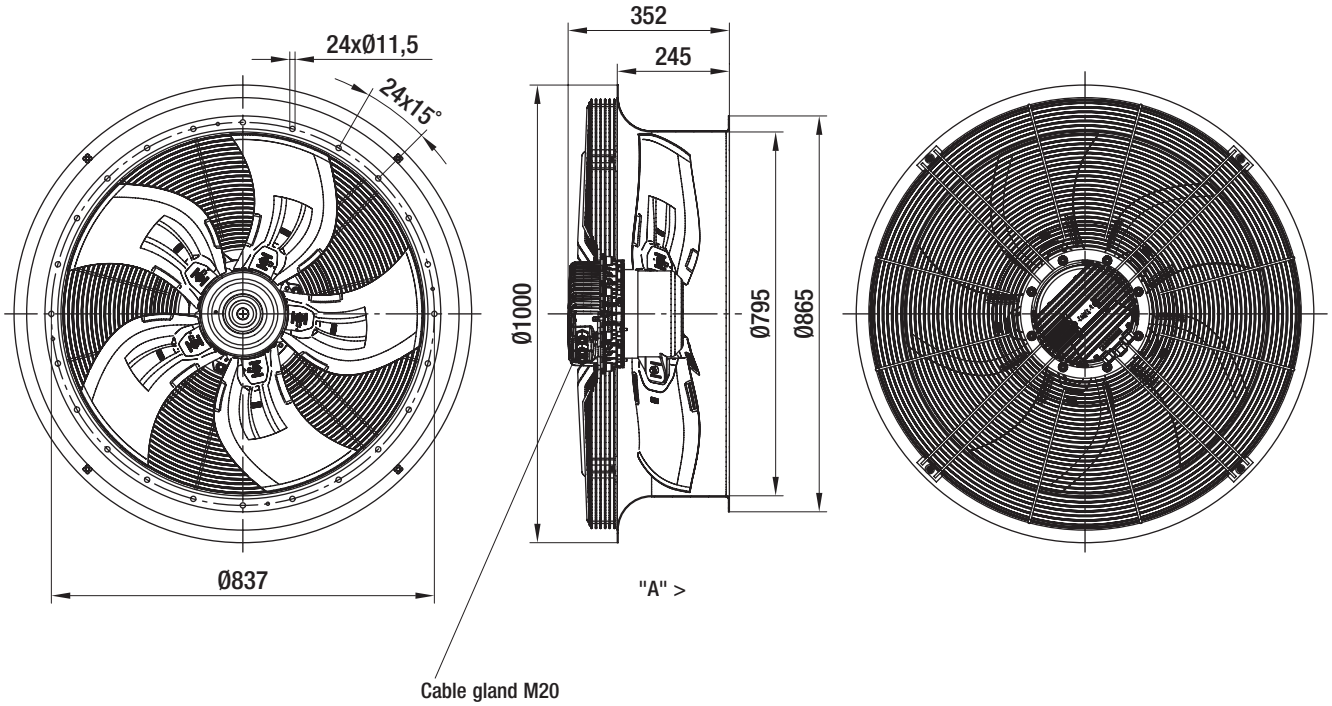

EC transformer fans

Ø 990

- **Material:** Guard grille made of steel, zinc-plated and plastic coated, RAL 9006
  Wall ring made of sheet steel, hot-dip galvanised and plastic coated, RAL 9006
  Screwed on fan blades made of die-cast aluminium, varnished, RAL 9005
  Stator and electronics housing made of die-cast aluminium, varnished, RAL 9005
  Rotor made of sheet steel, varnished, RAL 9005
- **Direction of air flow:** "A"
- **Direction of rotation:** counter-clockwise, seen on rotor
- **Type of protection:** IP 54 (according to EN 60529)
- **Insulation class:** "F"
- **Mounting position:** shaft horizontal or rotor on top
- **Condensate discharges:** in the stator flange
- **Operating mode:** Continuous operation (S1)
- **Bearings:** Maintenance-free ball bearings

Nominal data[1]

Type	Motor	Characteristic	Voltage range VAC	Frequency Hz	Air flow m³/h	Speed/rpm min⁻¹	Power input W	Current draw A	Max. back pressure Pa	Perm. amb. temp. °C	Mass kg
W3G990	M3G150-IF	A	380-480	50/60	31000	650	1030	1,8	120	-40..+60	60,5

subject to alterations

[1] at 400 VAC

Characteristics

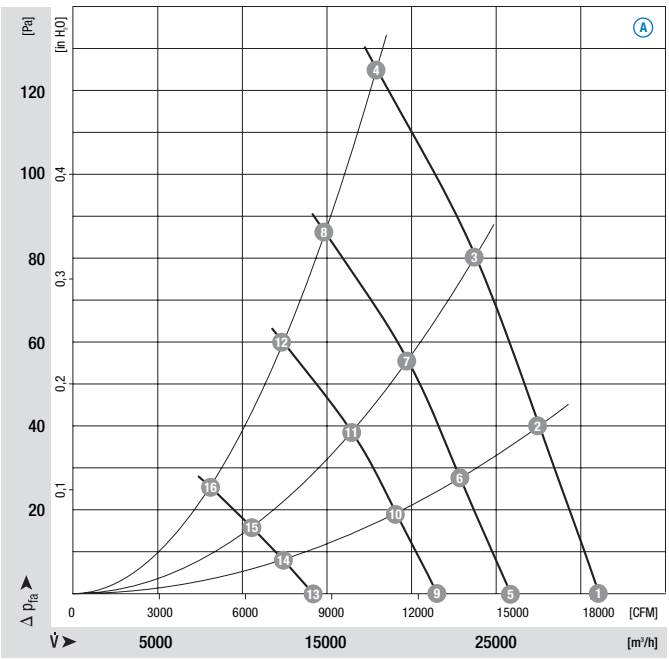

	n [min⁻¹]	P_1 [W]	I [A]	Lw_A [dB(A)]
A 1	650	1030	1,80	80
A 2	650	1230	2,30	81
A 3	650	1350	2,40	82
A 4	650	1500	2,40	85
A 5	540	610	1,30	76
A 6	540	720	1,40	77
A 7	540	800	1,50	78
A 8	540	860	1,60	81
A 9	450	370	0,80	72
A 10	450	430	0,90	73
A 11	450	460	0,90	74
A 12	450	500	1,00	77
A 13	300	100	0,17	63
A 14	300	120	0,22	64
A 15	300	130	0,23	65
A 16	300	145	0,23	68

ebmpapst

- **Technical features:** control input 0-10 VDC / PWM, RS485 ebmBUS, alarm relay, integrated PID control, voltage supply for sensor, input for sensor 0-10 V respectively 4-20 mA, 0-10 V output for slave, PFC (passive), soft start, line undervoltage detection, phase failure detection
- **Motor protection:** motor current limitation, over-temperature protected electronics and motor, locked-rotor protection
- **Protection class:** I (according to EN 61800-5-1)
- **Product conforming to standard:** CE
- **Approvals:** GOST, UL and VDE are applied for

Selection	Direction of air flow	
Type		
W3G990	"A"	W3G990-CD05 -80

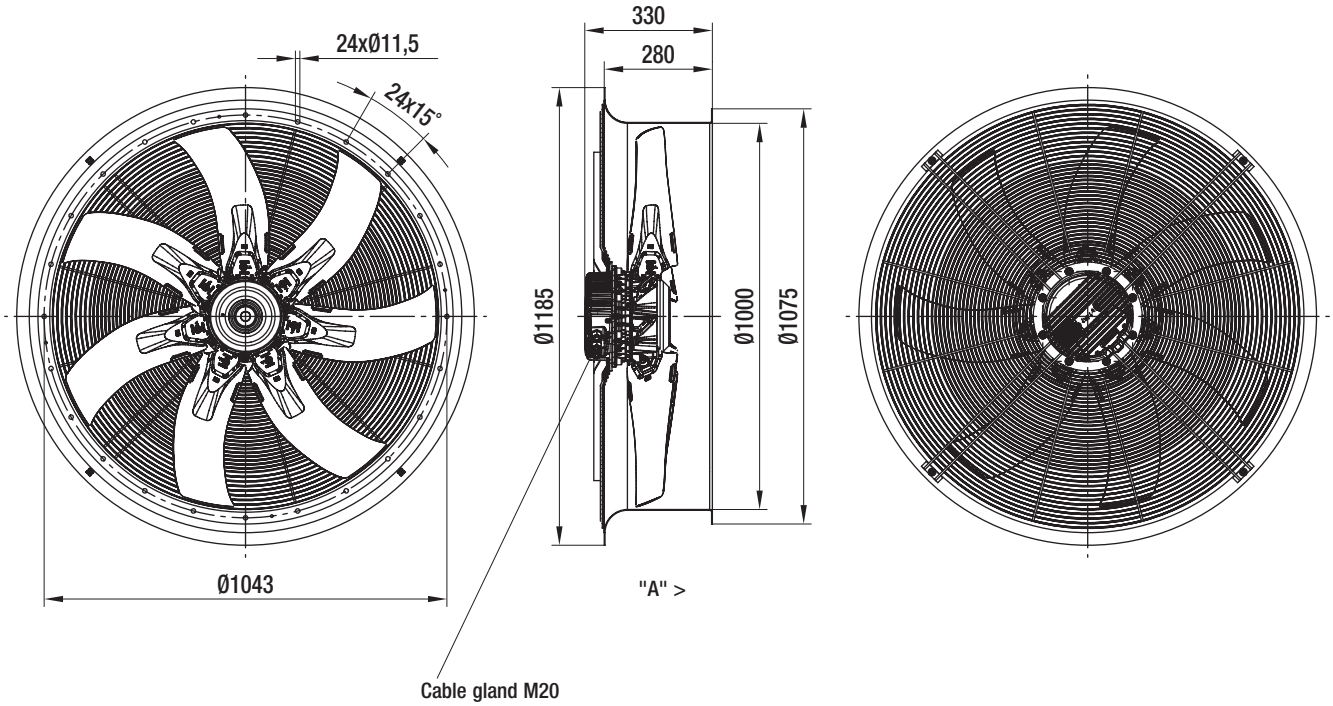

Accessories

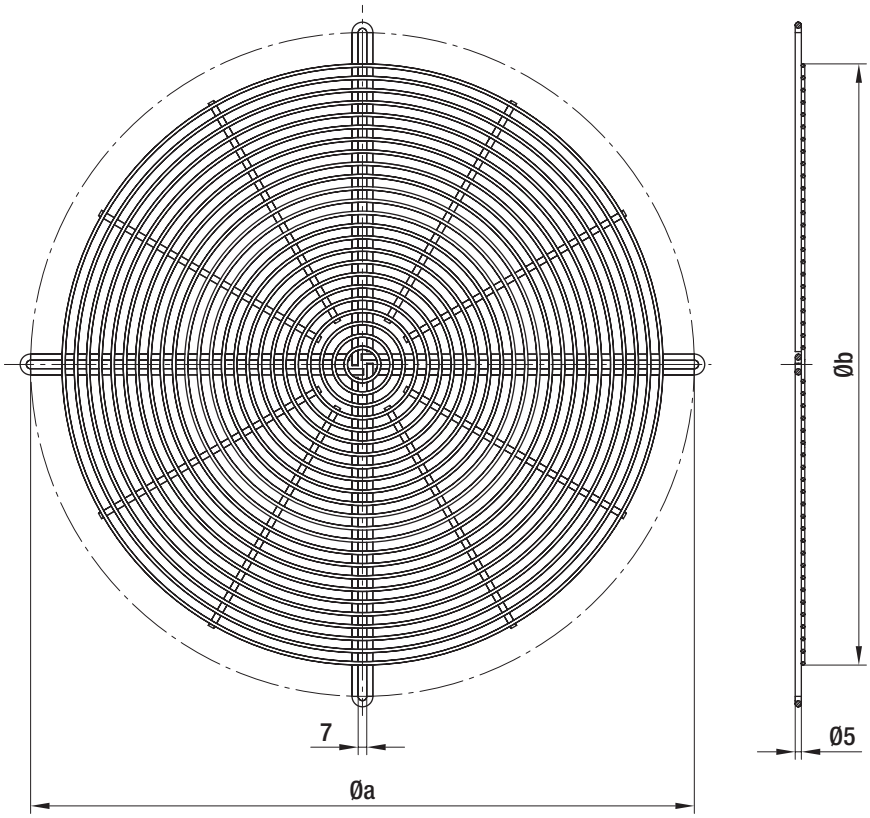

– **Material:** galvanised steel wire, plastic coated in RAL no. 9006

Guard grilles (to be mounted on pressing side)

Part no.	Size	a	b
40450-2-4039	450	487	450
40500-2-4039	500	541	490
40630-2-4039	630	674	630
40710-2-4039	710	751	710
40800-2-4039	800	837	790
40990-2-4039	990	1043	990

subject to alterations

Electrical connections

AC motors

Delta connection (3~ 400 VAC power line)
with TOP brought out
high speed

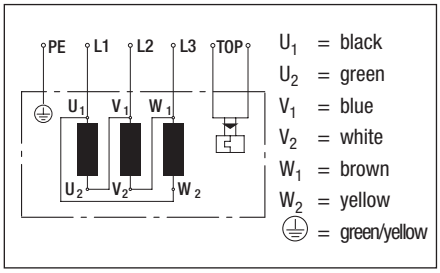

Star connection (3~ 400 VAC power line)
with TOP brought out
low speed

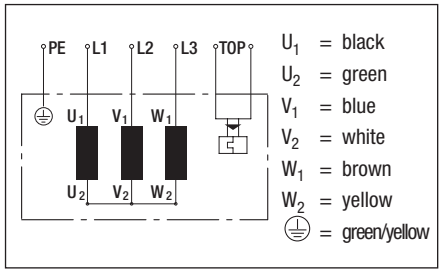

EC motors (size 150, 3-phase line-fed)

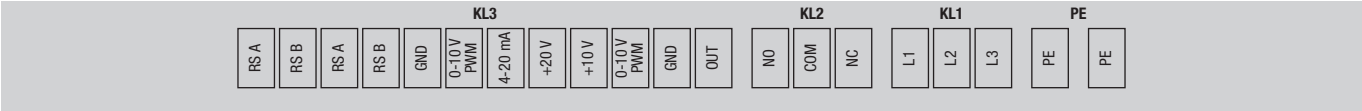

Connector	Signal	Assignment / function
PE	PE	Protective earth
KL1	L3	Mains; L3
	L2	Mains; L2
	L1	Mains; L1
KL2	NC	Alarm relay, break for failure
	COM	Alarm relay, COMMON (2A, 250 VAC, AC1)
	NO	Alarm relay, make for failure

Connector	Signal	Assignment / function
KL3	OUT	Master output 0-10 V max. 3 mA
	GND	GND
	0-10 V / PWM	Control / Actual value input (Impedance 100 kΩ)
	+10 V	Supply for external potentiometer,
		10 VDC (+10 %) @ 10 mA
	+20 V	Supply for external sensor,
		20 VDC (±20 %) @ 50 mA
	4-20 mA	Control / Actual value input
	0-10 V / PWM	Control / Actual value input
	GND	GND
	RSB	RS485 interface for ebmBUS; RS B
	RSA	RS485 interface for ebmBUS; RS A
	RSB	RS485 interface for ebmBUS; RS B
	RSA	RS485 interface for ebmBUS; RS A

fan agent
compact fan agent
motor specialist
motor agent

Distributors, agencies and subsidiaries

Germany

ebm-papst
Mulfingen GmbH & Co. KG

Bachmühle 2
D-74673 Mulfingen
Phone +49 (0) 79 38 / 81-0
Fax +49 (0) 79 38 / 81-110
info1@de.ebmpapst.com

www.ebmpapst.com

ebm-papst
St. Georgen GmbH & Co. KG

Hermann-Papst-Straße 1
D-78112 St. Georgen
Phone +49 (0) 77 24 / 81-0
Fax +49 (0) 77 24 / 81-13 09
info2@de.ebmpapst.com

www.ebmpapst.com

ebm-papst
Landshut GmbH

Hofmark-Aich-Straße 25
D-84030 Landshut
Phone +49 (0) 8 71 / 707-0
Fax +49 (0) 8 71 / 707-465
info3@de.ebmpapst.com

www.ebmpapst.com

Agencies

Berlin
Dipl.-Ing. (TH) Jens Duchow
Händelstraße 7
D-16341 Panketal
Phone +49 (0) 30 / 94 41 49 62
Fax +49 (0) 30 / 94 41 49 63
Jens.Duchow@de.ebmpapst.com

Dortmund
Dipl.-Ing. (FH) Hans-Joachim Pundt
Auf den Steinern 3
D-59519 Möhnesee-Völlinghausen
Phone +49 (0) 29 25 / 80 04 07
Fax +49 (0) 29 25 / 80 04 08
Hans-Joachim.Pundt@de.ebmpapst.com

Frankfurt
Dipl.-Ing. Christian Kleffmann
Dr. Hermann-Krause Straße 23
D-63452 Hanau
Phone +49 (0) 61 81 / 18 98 12
Fax +49 (0) 61 81 / 18 98 13
Christian.Kleffmann@de.ebmpapst.com

Halle
Dipl.-Ing. (TU) Michael Hanning
Lerchenweg 4
D-06120 Lieskau
Phone +49 (0) 3 45 / 5 51 24 56
Fax +49 (0) 3 45 / 5 51 24 57
Michael.Hanning@de.ebmpapst.com

Hamburg
Ingenieurbüro Breuell GmbH
Dirk Kahl
Elektroingenieur
Grützmühlenweg 40
D-22339 Hamburg
Phone +49 (0) 40 / 53 80 92 10
Fax +49 (0) 40 / 53 80 92 84
Dirk.Kahl@de.ebmpapst.com

Kassel
Dipl.-Ing. (FH) Ralph Brück
Hoherainstraße 38
D-35075 Gladenbach
Phone +49 (0) 64 62 / 40 71 10
Fax +49 (0) 64 62 / 40 71 11
Ralph.Brueck@de.ebmpapst.com

Koblenz
Winfried Schaefer
Hinter der Kirch 10
D-56767 Uersfeld
Phone +49 (0) 26 57 / 16 96
Fax +49 (0) 26 57 / 16 76
Winfried.Schaefer@de.ebmpapst.com

Munich
Dipl.-Wirt.-Ing. (FH) Jens Peter
Steinbergweg 6
D-82285 Hattenhofen
Phone +49 (0) 81 45 / 80 92 25
Fax +49 (0) 81 45 / 80 92 26
Jens.Peter@de.ebmpapst.com

Nuremberg
Friedrich Klein
Adlerstraße 49/1
D-73540 Heubach
Phone +49 (0) 71 73 / 49 83
Fax +49 (0) 71 73 / 80 53
Friedrich.Klein@de.ebmpapst.com

Offenburg
Dipl.-Ing (FH) Ralf Braun
Hubeneck 21
D-77704 Oberkirch
Phone +49 (0) 78 02 / 98 22 52
Fax +49 (0) 78 02 / 98 22 53
Ralf.Braun@de.ebmpapst.com

Stuttgart
Dipl.-Ing. (FH) Rudi Weinmann
Mühlhaldenweg 13
D-73207 Plochingen
Phone +49 (0) 71 53 / 92 89 80
Fax +49 (0) 71 53 / 92 89 81
Rudi.Weinmann@de.ebmpapst.com

Ulm
Günter Wilhelm
Allgäuer Straße 7
D-89269 Vöhringen
Phone +49 (0) 73 06 / 92 46 08
Fax +49 (0) 73 06 / 92 46 48
Guenter.Wilhelm@de.ebmpapst.com

Distributors

Frankfurt
R.E.D. Handelsgesellschaft mbH
Gutenbergstraße 3
D-63110 Rodgau - Jügesheim
Phone +49 (0) 61 06 / 84 10
Fax +49 (0) 61 06 / 84 11 11
info@red-elektromechanik.de
www.red-elektromechanik.de

Hamburg
Breuell + Hilgenfeldt GmbH
Grützmühlenweg 40
D-22339 Hamburg
Phone +49 (0) 40 / 53 80 92 20
Fax +49 (0) 40 / 53 80 92 84
info@breuell.de

Munich
A. Schweiger GmbH
Ohmstraße 1
D-82054 Sauerlach
Phone +49 (0) 81 04 / 8 97 0
Fax +49 (0) 81 04 / 8 97 90
info@schweiger-gmbh.de
www.schweiger-gmbh.com

● *Express* **Service-Center** (1 to 5 pieces)

North
Breuell + Hilgenfeldt GmbH
Grützmühlenweg 40
D-22339 Hamburg
Phone +49 (0) 40 / 53 80 92 20
Fax +49 (0) 40 / 53 80 92 84
ebm@breuell.de

South
HDS Ventilatoren Vertriebs GmbH
Glaswiesenstraße 1
D-74677 Dörzbach
Phone +49 (0) 79 37 / 80 29 68
Fax +49 (0) 79 37 / 80 25 78
info@hds-gmbh.net

Europe

Austria
ebm-papst Motoren & Ventilatoren GmbH
Westbahnstraße 5
A-4490 St. Florian
Phone +43 / 72 24 / 66 01 10
Fax +43 / 72 24 / 66 01 120
info@at.ebmpapst.com
www.ebmpapst.at

Belarus
ebm-papst Bel AgmbH
Prospekt Nesavisimosti 11/2 Zimmer 325, 512
BY-220050 Minsk
Phone +375 / 17 / 209 95 61
Fax +375 / 17 / 209 95 61
info@by.ebmpapst.com

Belgium
VIBO Benelux B. V.
Sales office Belgium-Luxemburg
Romeinsestraat 6/0101
Research Park Haasrode
B-3001 Heverlee-Leuven
Phone +32 / 16 / 39 62 00
Fax +32 / 16 / 39 62 20
info@vibobenelux.com
www.vibobenelux.com

Bulgaria
ebm-papst Romania S.R.L.
Str. Tirnavei Nr. 20
RO-500327 Brasov
Phone +40 / 268 / 312 805
Fax +40 / 268 / 312 805
dudasludovic@xnet.ro

Croatia
ebm-papst Industries Kft.
Mátyás u. 1/A
H-2220 Vecsés
Phone +36 / 29 / 55 01 90
Fax +36 / 29 / 55 01 94
office@hu.ebmpapst.com
www.ebmpapst.hu

Cyprus
MATERO LTD
37, St. Kyriakides Avenue
P.O. Box 51744
CY-3080 Limassol
Phone +357 / 25 / 87 00 30
Fax +357 / 25 / 38 13 66
matero@cytanet.com.cy
www.matero.com.cy

Czech Republic / Slovakia
ebm-papst CZ s.r.o.
Krátká 379
CZ-66461 Rajhradice u Brna
Phone +420 / 5 / 47 23 26 16
Fax +420 / 5 / 47 23 26 22
info@ebmpapst.cz
www.ebmpapst.cz

Denmark
Jenk A/S
Vallensbækvej 21
DK-2605 Brøndby
Phone +45 / 43 / 63 11 11
Fax +45 / 43 / 63 05 05
jenk@jenk.dk
www.jenk.dk

Estonia
ebm-papst Oy
Eesti Filiaal
Kadaka tee 3
EST-10621 Tallinn
Phone +372 / 655 / 6978
Fax +372 / 655 / 6979

Finland
ebm-papst Oy
Puistotie 1
FIN-02760 Espoo
Phone +358 / 9 / 88 70 22 0
Fax +358 / 9 / 88 70 22 13
mailbox@ebmpapst.fi
www.ebmpapst.fi

France
ebm-papst SARL
ZI Nord - rue A. Mohler
BP 62
F-67212 Obernai-Cedex
Phone +33 / 820 326 266
Fax +33 / 3 / 88 67 38 83
info@ebmpapst.fr
www.ebmpapst.fr

Greece
Helcoma
Th. Rotas & Co OE
Davaki 65
GR-17672 Kallithea-Attiki
Phone +30 / 210 / 951 37 05
Fax +30 / 210 / 951 34 90
contact@helcoma.gr
www.helcoma.gr

Hungary
ebm-papst Industries Kft.
Mátyás u. 1/A
H-2220 Vecsés
Phone +36 / 29 / 55 01 90
Fax +36 / 29 / 55 01 94
office@hu.ebmpapst.com
www.ebmpapst.hu

Iceland
RJ Engineers
Stangarhyl 1A
IS-110 Reykjavik
Phone +354 / 567 80 30
Fax +354 / 567 80 15
rj@rj.is
www.rj.is

Ireland
ebm-papst Limited
Portlaoise Business & Technology Park
Mountrath Road
IRL-Portlaoise, Co. Laois
Phone +353 / 57 86 / 643 43
Fax +353 / 57 86 / 643 46
sales@ie.ebmpapst.com
www.ebmpapst.ie

Italy
ebm-papst Srl
Via Cornaggia 108
I-22076 Mozzate (Co)
Phone +39 / 03 31 / 83 62 01
Fax +39 / 03 31 / 82 15 10
info@it.ebmpapst.com
www.ebmpapst.it

Macedonia
ebm-papst Industries Kft.
Mátyás u. 1/A
H-2220 Vecsés
Phone +36 / 29 / 55 01 90
Fax +36 / 29 / 55 01 94
office@hu.ebmpapst.com
www.ebmpapst.hu

fan agent
compact fan agent
motor specialist
motor agent

Distributors, agencies and subsidiaries

Netherlands
VIBO Benelux B. V.
Engelseweg 127
Postbus 230
NL-5705 AC Helmond
Phone +31 / 4 92 / 50 29 00
Fax +31 / 4 92 / 50 29 50
verkoop@vibobenelux.com
www.vibobenelux.com

Norway
Ziehl-ebm as
P.B. 173 Holmlia
N-1203 Oslo
Phone +47 / 22 / 76 33 40
Fax +47 / 22 / 61 91 73
mailbox@ziehl-ebm.no
www.ziehl-ebm.no

Poland
ebm-papst Polska Sp. z o.o.
ul. Annopol 4A
PL-03236 Warszawa
Phone +48 / 22 / 675 78 19
Fax +48 / 22 / 676 95 87
office@ebmpapst.pl
www.ebmpapst.pl

Portugal
ebm-papst (Portugal), Lda
Av. Marechal Gomes da Costa, 35 e
Rua Conselheiro Emidio Navarro
P-1800-255 Lisboa
Phone +351 / 21 / 839 48 80
Fax +351 / 21 / 839 47 59
info@pt.ebmpapst.com

Romania
ebm-papst Romania S.R.L.
Str. Tirnavei Nr. 20
RO-500327 Brasov
Phone +40 / 268 / 312 805
Fax +40 / 268 / 312 805
dudasludovic@xnet.ro

Russia
ebm-papst Ural GmbH
Rosa Luxemburg Strasse 59
RU-620026 Jekaterinburg
Phone +7 / 343 / 378 31 75
Fax +7 / 343 / 378 31 89
Konstantin.Molokov@ru.ebmpapst.com
www.ebmpapst.ur.ru

ebm-papst Rus GmbH
Nizhegorodskaya 32, str. 15 office 420
RU-109029 Moskau
Phone +7 / 495 / 671 53 93
Fax +7 / 495 / 671 53 95
info@ebmpapst.ru
www.ebmpapst.ru

ebm-papst Rus
Saint-Petersburg´s Filial
Zastavskaya 7
RU-196084 Sankt-Petersburg
Phone +7 / 812 / 449 96 07
Fax +7 / 812 / 449 96 07
spb@ru.ebmpapst.com

Serbia & Montenegro
ebm-papst Industries Kft.
Mátyás u. 1/A
H-2220 Vecsés
Phone +36 / 29 / 55 01 90
Fax +36 / 29 / 55 01 94
office@hu.ebmpapst.com
www.ebmpapst.hu

Spain
ebm-papst Ibérica S.L.
Avda. del Sistema Solar, 29
E-28830 San Fernando de Henares (Madrid)
Phone +34 / 91 / 678 08 94
Fax +34 / 91 / 678 15 30
ventas@ebmpapst.es

Sweden
Ziehl-ebm AB
Äggelundavägen 2
S-17562 Järfälla
Phone +46 / 8 / 761 94 00
Fax +46 / 8 / 36 23 06
info@ziehl-ebm.se
www.ziehl-ebm.se

Switzerland
ebm-papst AG
Rütisbergstraße 1
CH-8156 Oberhasli
Phone +41 / 44 / 732 20 70
Fax +41 / 44 / 732 20 77
verkauf@ebmpapst.ch
www.ebmpapst.ch

Turkey
Akantel Elektronik San. Tic. LTD. Sti.
Atatürk Organize Sanayi
Bölgesi 10007 SK. No.:6
TR-35620 Cigli-Izmir
Phone +90 / 2 32 / 32 82 090 -91
Fax +90 / 2 32 / 32 80 270
akantel@akantel.com.tr
www.akantel.com.tr

Ukraine
ebm-papst Ukraine GmbH
Lepse Boulevard 4, Haus 47 Etage 5
UA-03067 Kiev
Phone +38 / 044 / 206 30 91
Fax +38 / 044 / 206 30 91
mail@ebmpapst.ua
www.ebmpapst.ua

United Kingdom
ebm-papst UK Ltd.
Chelmsford Business Park
GB-Chelmsford Essex CM2 5EZ
Phone +44 / 12 45 / 46 85 55
Fax +44 / 12 45 / 46 63 36
sales@uk.ebmpapst.com
www.ebmpapst.co.uk

ebm-papst Automotive & Drives (UK) Ltd.
Suite B, The Barn
Sheepdown, East Ilsley
GB-Berkshire RG20 7LY
Phone +44 / 87 07 / 66 51 70
Fax +44 / 87 07 / 66 51 80
A&Dsales@uk.ebmpapst.com
www.ebmpapst.co.uk

America

Argentinia
ebm-papst de Argentina S.A.
Hernandarias 148 Lomas del Mirador
Pcia. de Buenos Aires (1752)
Phone +54 / 11 46 57 61 35
Fax +54 / 11 46 57 20 92
ventas@ar.ebmpapst.com

Brasil
ebm-papst Motores Ventiladores Ltda.
Rua Francisco D´Amico, 155
Bairro Pirajussara
BR-06785-290 Taboão da Serra-SP
Phone +55 /11 / 41 38 50 90
Fax +55 /11 / 41 38 50 86
vendas@br.ebmpapst.com
www.ebmpapst.com.br

Canada
ebm-papst Canada Inc.
1800 Ironstone Manor, Unit 2
CDN-Pickering, Ontario, L1W3J9
Phone +1 / 905 / 420 / 35 33
Fax +1 / 905 / 420 / 37 72
sales@ca.ebmpapst.com
www.ebmpapst.ca

Mexico
ebm Industrial S.de R.L. de C.V.
Paseo de Tamarindos 400-A-5to Piso
Col. Bosques de las Lomas
MEX-Mexico 05120, D.F.
Phone +52 / 55 / 50 91 44 44
Fax +52 / 55 / 50 91 44 43
sales@mx.ebmpapst.com
www.ebmpapst.com.mx

USA
ebm-papst Inc.
P.O. Box 4009
100 Hyde Road
USA-Farmington, CT 06034
Phone +1 / 860 / 674 15 15
Fax +1 / 860 / 674 85 36
sales@us.ebmpapst.com
www.ebmpapst.us

ebm-papst Automotive & Drives, Inc.
3200 Greenfield, Suite 255
USA-Dearborn, MI 48120
Phone +1 / 313 / 406 80 80
Fax +1 / 313 / 406 80 81
automotive@us.ebmpapst.com
www.ebmpapst-automotive.us

Africa

South Africa
ebm-papst South Africa (Pty) Ltd.
P.O. Box 3124
1119 Yacht Avenue
ZA-2040 Honeydew
Phone +27 / 11 / 794 34 34
Fax +27 / 11 / 794 50 20
info@za.ebmpapst.com
www.ebmpapst.co.za

fan agent
compact fan agent
motor specialist
motor agent

Distributors, agencies and subsidiaries

Asia

China
ebm-papst Ventilator (Shanghai) Co., Ltd.
No. 418, Huajing Road
WaiGaoQiao Free Trade Zone
No. 2001, Yang Gao (N) Road
VRC-200131 Shanghai, P.R. of China
Phone +86 / 21 / 50 46 01 83
Fax +86 / 21 / 50 46 11 19
sales@cn.ebmpapst.com

Hong Kong
ebm-papst Ventilator (Shanghai) Co., Ltd.
Hong Kong Representative Office
Unit Nos. 13, 9/F, Technology Park
18 On Lai Street, Sha Tin, N.T.
HK-Hong Kong P.R. of China
Phone +852 / 21 45 / 86 78
Fax +852 / 21 45 / 76 78
chenghong@cn.ebmpapst.com

India
ebm NADI International Pvt Ltd.
26/3, G.N.T. Road, Erukkencherry
IND-Chennai-600118
Phone +91 / 44 / 25 37 25 56
Fax +91 / 44 / 25 37 11 49
ebmnadi@md2.vsnl.net.in
www.ebmnadi.com

Indonesia
ebm-papst Indonesia
Representative Office
Jalan Puri Kencana, Blok K7/3T
RI-Jakarta 11610
Phone +62 / 21 / 582 / 31 18
Fax +62 / 21 / 582 / 31 17
sonny.sanjaya@id.ebmpapst.com

Israel
Polak Bros. Import Agencies Ltd.
9 Hamefalsim Street
IL-Kiryat Arie, Petach-Tikva 49514
Phone +972 / 3 / 910 03 00
Fax +972 / 3 / 579 66 79
polak@polak.co.il

Japan
ebm-papst Industries Japan K.K.
12 Floor, Benex S-3 Bldg.
3-20-8 Shinyokohama, Kohoku-ku
J-222-0033 Yokohama
Phone +81 / 45 / 470 / 57 51
Fax +81 / 45 / 470 / 57 52
info@jp.ebmpapst.com
www.ebmpapst.jp

Korea
ebm-papst Korea Co. Ltd.
6F, Trutec Bldg.
B 6-2, Digital Media City (DMC)
Sangam-Dong, Mapo-Gu
ROK-Seoul 121-270
Phone +82 / 2 / 36 62 / 13 24
Fax +82 / 2 / 36 62 / 13 26
info@kr.ebmpapst.com
www.ebmpapst.co.kr

Malaysia
ebm-papst Malaysia
Representative Office
Block F1, 9A-4, Jalan PJU 1/42
Dataran Prima
MAL-47301 Petaling Jaya
Phone +60 / 3 / 78 06 54 40
Fax +60 / 3 / 78 06 54 41
john.bulder@my.ebmpapst.com

Singapore
ebm-papst SEA Pte. Ltd.
23 Ubi Road 4, #05-00
Olympia Industrial Building
SGP-Singapore 408620
Phone +65 / 68 42 84 38
Fax +65 / 68 42 84 39
salesdept@sg.ebmpapst.com

Taiwan
ETECO Engineering & Trading Corp.
10F-I, No. 92, Teh-Wei Str.
RC-Tsow-Inn District, Kaohsiung
Phone +886 / 7 / 557 42 68
Fax +886 / 7 / 557 27 88
eteco@ms22.hinet.net

Thailand
ebm-papst Thailand Co. Ltd.
Representative Office
99/349 Chaeng Wattana Road, Laksi
Bangkok 10210, Thailand
Phone +66 / 2 / 576 / 15 24-5
Fax +66 / 2 / 576 / 15 42
salesdept@th.ebmpapst.com

United Arab Emirates
ebm-papst Middle East FZE
PO Box 17755
Jebel Ali Free Zone / FZS1 / AP05
UAE-Dubai
Phone +971 / 4 / 886 08 26
Fax +971 / 4 / 886 08 27
info@ae.ebmpapst.com

Australia

Australia
ebm-papst Australia Pty Ltd.
2 Silverton Close
AUS-Laverton North, Victoria, 3026
Phone +61 / 3 / 83 25 64 00
Fax +61 / 3 / 83 25 64 64
sales@ebm-papst.com.au
www.ebm-papst.com.au

New Zealand
ebm-papst Australia Pty Ltd.
102 Henderson Valley Road
NZ-Henderson, Auckland 1230
Phone +64 / 9 / 837 18 84
Fax +64 / 9 / 837 18 99
sales@ebm-papst.com.au
www.ebm-papst.com.au

ebm-papst
Mulfingen GmbH & Co. KG

Bachmühle 2
D-74673 Mulfingen
Phone +49 (0) 79 38 / 81-0
Fax +49 (0) 79 38 / 81-110
info1@de.ebmpapst.com

www.ebmpapst.com

ebmpapst